TC-FX45

SERVICE MANUAL

US Model
Canadian Model
AEP Model
UK Model
E Model

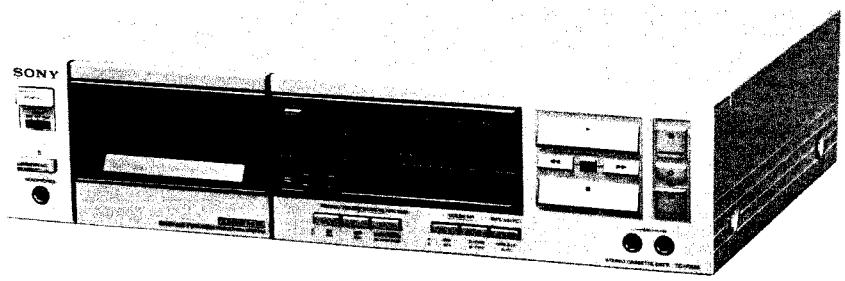

'Dolby' and the double-D symbol are the trade marks of Dolby Laboratories Licensing Corporation. Noise reduction system manufactured under license from Dolby Laboratories Licensing Corporation.

SPECIFICATIONS

Recording system 4-track 2-channel stereo

Fast-forward and rewind time
Approx. 100 sec. (with C-60 cassette)

Bias frequency 105 kHz

Signal-to-noise ratio (NAB, at peak level)

Dolby NR switch / Cassette	OFF	B-TYPE ON	C-TYPE ON
TYPE IV (Sony METALLIC)	58 dB	65 dB	71 dB
TYPE III (Sony FeCr)	59 dB	66 dB	72 dB
TYPE II (Sony UCX)	56 dB	63 dB	69 dB
TYPE I (Sony BHF or HFX)	54 dB	61 dB	67 dB

Total harmonic distortion
1.0% (with Sony METALLIC and FeCr cassettes)

Frequency response DOLBY NR OFF
- With TYPE IV cassette (Sony METALLIC)
  20 - 18,000 Hz
  30 - 16,000 Hz (±3 dB), (DIN)
  30 - 13,000 Hz (±3 dB, 0 VU recording)
- With TYPE III cassette (Sony FeCr)
  20 - 18,000 Hz
  30 - 16,000 Hz (±3 dB), (DIN)
- With TYPE II cassette (Sony UCX)
  20 - 17,000 Hz
  30 - 15,000 Hz (±3 dB), (DIN)
- With TYPE I cassette (Sony BHF or HFX)
  20 - 16,000 Hz

— Continued on page 2 —

SAFETY-RELATED COMPONENT WARNING!!

COMPONENTS IDENTIFIED BY SHADING AND MARK ⚠ ON THE SCHEMATIC DIAGRAMS, EXPLODED VIEWS AND IN THE PARTS LIST ARE CRITICAL TO SAFE OPERATION. REPLACE THESE COMPONENTS WITH SONY PARTS WHOSE PART NUMBERS APPEAR AS SHOWN IN THIS MANUAL OR IN SUPPLEMENTS PUBLISHED BY SONY.

ATTENTION AU COMPOSANT AYANT RAPPORT À LA SÉCURITÉ!

LES COMPOSANTS IDENTIFIES PAR UNE TRAME ET UNE MARQUE ⚠ SUR LES DIAGRAMMES SCHÉMATIQUES, LES VUES ÉCLATÉES ET LA LISTE DES PIÈCES SONT CRITIQUES POUR LA SÉCURITÉ DE FONCTIONNEMENT. NE REMPLACER CES COMPOSANTS QUE PAR DES PIÈCES SONY DONT LES NUMÉROS SONT DONNÉS DANS CE MANUEL OU DANS LES SUPPLÉMENTS PUBLIÉS PAR SONY.

MICROFILM

STEREO CASSETTE DECK

SONY

TC

Wow and Flutter: 0.05% WRMS (NAB)
±0.14% (DIN)

Inputs: Microphone inputs (phone jacks)
Sensitivity 0.25 mV (-70 dB)
For a low-impedance microphone
Line inputs (phono jacks)
Sensitivity 77.5 mV (-20 dB)
Input impedance 47 k ohms

Outputs: Line outputs (phono jacks)
Output level 0.44 V (-5 dB) at load impedance 47 k ohms
Load impedance over 10 k ohms
Headphone output
Output level -28 dB at a load impedance of 8 ohms

General

Power Requirements: AEP model: 220 V ac, 50/60 Hz
(240 V ac adjustable by authorized Sony personnel)
UK model: 240 V ac, 50 Hz
(220 V ac adjustable by authorized Sony personnel)
US, Canadian model: 120 V ac, 60 Hz
E model: 110, 120, 220 or 240 V ac adjustable, 50/60 Hz

Power Consumption: 14 watts

Dimensions: Approx. 430 x 105 x 275 mm (w/h/d)
(17 x 4 1/4 x 10 7/8 inches)
including projecting parts and controls

Weight: US, Canadian, AEP, UK model:
Approx. 4.4 kg (9 lbs 12 oz)
E model: Approx. 4.5 kg (9 lbs 15 oz)

0 dB = 0.775 V

Tape Transport Mechanism Type	TCM-130V10

FEATURES

Dolby NR C-type noise reduction system
In addition to the conventional B-type Dolby NR system, this cassette deck employs the newly-developed C-type Dolby NR system which reduces tape noise twice as effectively as the B-type system. The C-type system also incorporates an anti-saturation network to improve the high-frequency dynamic range by 4 dB at 10 kHz.

Full-logic "feather-touch" operation
At the slightest touch, the "feather-touch" function buttons enable you to switch directly from one mode to another without going through the stop mode.

Blank skip function
Blank spaces of at least 10 seconds long can be skipped in the fast-forward mode so that only the recorded portions of the tape are played back.

Music scan function
The first 10 seconds or so of all the selections on a tape can be played back in sequence. Thus the particular selection can be located easily.

Repeat play
Playback of one side of the cassette can be repeated five times. At the end of the tape, the cassette deck will automatically go into the rewind mode, and playback will be repeated from the beginning of the tape.

AMS (Automatic Music Sensor)
The AMS locates the beginning of the selection being played, or the following selection, by searching either forward, or in reverse, for the blank space between selections, and then plays back the selection automatically.

Automatic tape select system
The tape type is automatically detected and the recorder is adjusted to its optimum bias current for recording and the optimum equalization for both recording and playback by simply inserting the cassette in the cassette holder.

Auto play
The auto play function makes automatic replay possible promptly after the tape is rewound to the beginning.

Remote control operation
Using the optional RM-50, RM-51 or RM-80 remote control unit, various operations—recording, playback, AMS, record muting operation, etc.—can be remotely controlled. When the RM-65 synchro remote control unit is used to connect this cassette deck with a turntable equipped with a synchro remote control jack, the operation of the cassette deck and the turntable will be synchronized.

Timer-activated recording or playback
A timer switch is provided to turn the deck on and off at times preset on an optional timer.

MODEL INDENTIFICATION

– Specification Label –

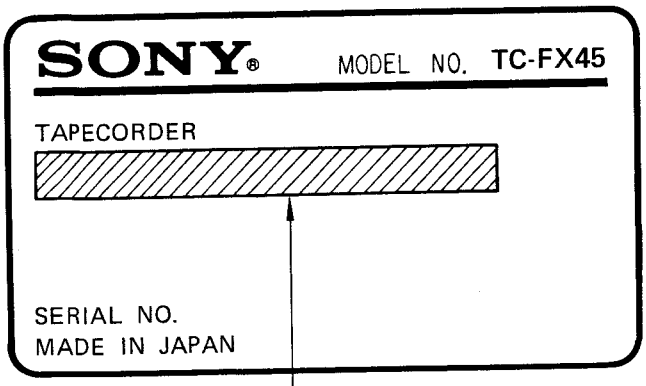

– Power Cord –

E_1 model: euro-plug 1-555-734-00

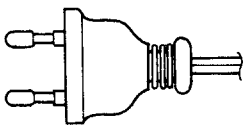

E_2 model: parallel-blade plug 1-551-472-00

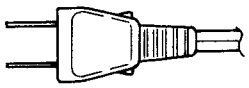

US, Canadian model: AC: 120 V 60 Hz 14W
AEP model: AC: 220 V 50/60 Hz 14W
UK model: AC: 240 V 50/60 Hz 14W
E model: AC: 110, 120, 220, 240 V 50/60 Hz 14W

SAFETY CHECK-OUT (US Model)

After correcting the original service problem, perform the following safety check before releasing the set to the customer:
Check the antenna terminals, metal trim, "metallized" knobs, screws, and all other exposed metal parts for AC leakage. Check leakage as described below.

LEAKAGE TEST

The AC leakage from any exposed metal part to earth ground and from all exposed metal parts to any exposed metal part having a return to chassis, must not exceed 0.5 mA (500 microampers). Leakage current can be measured by any one of three methods.

1. A commercial leakage tester, such as the Simpson 229 or RCA WT-540A. Follow the manufacturers' instructions to use these instruments.
2. A battery-operated AC milliammeter. The Data Precision 245 digital multimeter is suitable for this job.
3. Measuring the voltage drop across a resistor by means of a VOM or battery-operated AC voltmeter. The "limit" indication is 0.75 V, so analog meters must have an accurate low-voltage scale. The Simpson 250 and Sanwa SH-63Trd are examples of a passive VOM that is suitable. Nearly all battery operated digital multimeters that have a 2 V AC range are suitable. (See Fig. A)

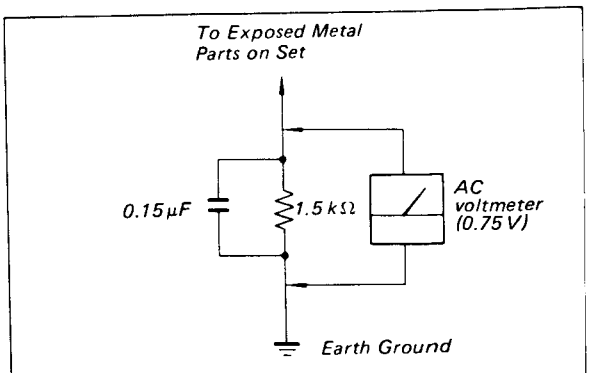

Fig. A. Using an AC voltmeter to check AC leakage.

FUNCTION OF CONTROLS

The numbers in the photo are keyed to the following explanations.

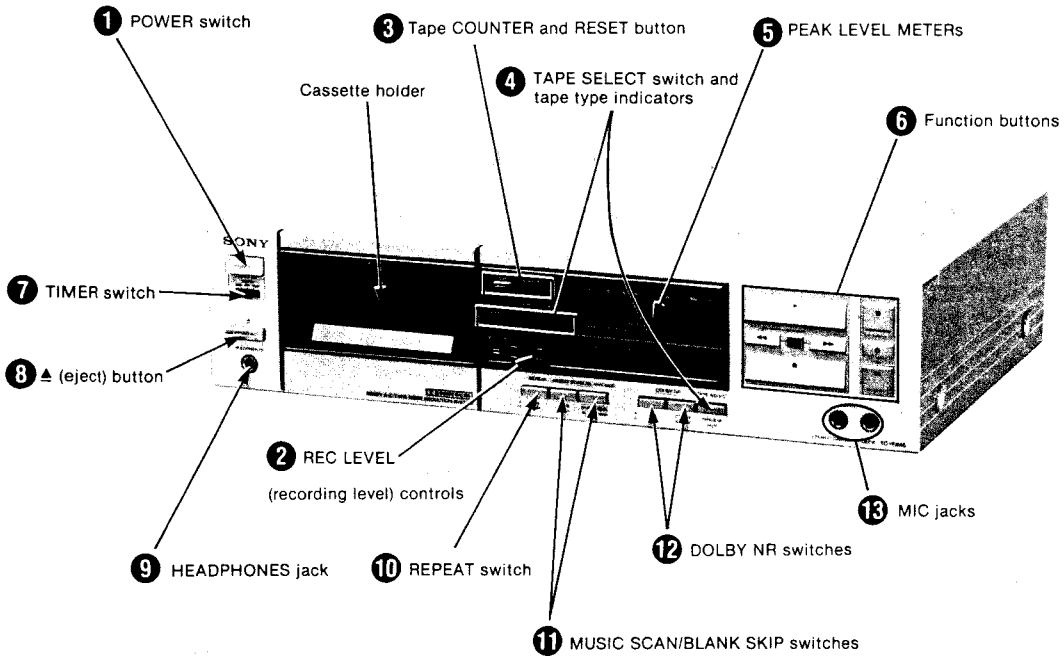

❶ POWER switch
This turns the power on or off. The peak level meters illuminate when the unit is turned on.

❷ REC LEVEL (recording level) controls
These controls adjust the recording level. The upper slide bar is for the left channel and the lower for the right channel.

❸ Tape COUNTER and RESET button
The tape counter provides a numerical reference point while recording which can be used to index a recorded cassette. To reset to zero, press the RESET button.

❹ TAPE SELECT switch and tape type indicators
Generally set this switch to AUTO (⊓). The automatic tape select system will then operate. When using a TYPE III (Fe-Cr) cassette or a TYPE IV (METAL) cassette which has no METAL tape detector slots, depress this switch to set it to the TYPE III (IV) position (⏍).

When inserting a cassette, one of the tape type indicators will light up depending on the type of tape and the position of the TAPE SELECT switch.

❺ PEAK LEVEL METERs
These meters show the peak input level of each channel during recording, and recorded levels in the playback mode. They follow the transient peaks of high-level inputs that are too brief to be followed by conventional VU meters so that the optimum recording level can be accurately set.

❻ Function buttons
It is possible to switch directly from one mode to another. The indicator lamps on the buttons light to show the operating mode (except the ◀◀, ▶▶ and ■ buttons).

▶ (forward) button : Press this button to play the tape back. To record, press this button while holding the ● button down.
◀◀ (rewind) button : Press this button to rewind the tape. This button is also used for "AMS" and "Auto play".
AMS button : Press this button and the ◀◀ or ▶▶ button for AMS function.
▶▶ (fast-forward) button : Press this button to advance the tape rapidly. This button is also used for "AMS".
■ (stop) button : To stop the tape, press this button. The tape will stop automatically when it is completely wound in either direction.
● (record) button : Press this button together with the ▶ button to start recording. Also press this button before adjusting the recording level.
O (record muting) button : Press this button to eliminate unwanted material and to insert a blank space during recording.
❚❚ (pause) button : To pause for a moment during recording or playback, press this button. This button is also used to control more precisely the start of recording and to release the record muting mode.

❼ TIMER switch
You can set the unit to record or play back at a predetermined time by connecting any commercially available timer. To record, set this timer switch to REC. To play back, set it to PLAY.

❽ ⏏ (eject) button
Press this button to open the cassette holder.

❾ HEADPHONES jack
Headphones may be inserted either to monitor the input signals to be recorded or to listen to a recording in the playback mode.

❿ REPEAT switch
Depress this switch (⏍ ON) to repeat the playing of one side of the cassette five times. Press it again (⊓ OFF) to cancel repeat play.

⓫ MUSIC SCAN/BLANK SKIP switches
The ON/OFF switch on the left actuates and switches off the music scan and blank skip functions and the switch on the right selects either the music scan function or the blank skip function.
Depress the left switch (⏍ ON) and the right switch (⏍ MUSIC SCAN) to scan the first 10 seconds of all the selections.

Depress the left switch (⏍ ON) and release the right switch (⊓ BLANK SKIP) to skip blank spaces representing more than 10 seconds, during playback.

⓬ DOLBY NR switches
The left switch turns the Dolby NR* (Noise Reduction) system on and off and the right switch selects either the B-type or C-type Dolby NR system.
To record with the Dolby NR process, depress the ON/OFF switch to the ON position and choose between B-TYPE (⊓) and C-TYPE (⏍).
To record without the Dolby NR process, press the ON/OFF switch again to release.
When playing back, set these switches to the same position used in recording.
For details about the Dolby NR system.

* "Dolby" and the double-D symbol are trade marks of the Dolby Laboratories Licensing Corporation. Noise reduction system manufactured under license from Dolby Laboratories Licensing Corporation.

⓭ MIC jacks
Any low-impedance microphone equipped with a phone plug may be used. If your microphone is equipped with a mini plug, you will need a plug adaptor.

TROUBLE CHECKS

The following trouble checks will help you correct the most common problems encountered with a tape deck. Should any problem persist after you have made these checks, consult your nearest Sony service facility.
Before proceeding with these trouble checks, first check these basic points :
- The power cord must be firmly connected.
- Amplifier connections must be firmly made.
- Heads, capstan and pinch roller should be clean.
- The amplifier controls and switches should be set correctly.

FUNCTION BUTTONS AND TAPE TRANSPORT PROBLEMS

The function buttons do not activate right after the POWER switch is turned on.
- Logic-controlled function buttons operate approximately 2 seconds after the POWER switch is turned on.

The ● button and the ▶ button do not activate.
- The cassette holder is not fully closed.

The ● button does not activate.
- No cassette in the holder.
- The tab has been removed from the cassette.

The automatic shut-off mechanism activates before the end of the tape.
- The tape is slack.
- This situation may also be caused by a deformed cassette shell.

Tape transport noise seems excessively loud in rewind or fast-forward mode.
- This situation depends upon the cassette used and is not a problem.

RECORDING AND PLAYBACK PROBLEMS

Recording or playback cannot be made or there is a decrease in sound level.
- Contamination or magnetic build-up on the record/playback head.
- Improper connection.
- Improper setting of the amplifier controls.

The AMS does not operate.
- The blank space between the selections is less than four seconds long.
- Severe noise or hum exists in the blank spaces.
- A recorded selection is less than 20 seconds long.

The MUSIC SCAN and BLANK SKIP functions do not operate.
- The ON/OFF switch on the left of the MUSIC SCAN/BLANK SKIP switches is released (OFF).

Excessive wow or flutter or drop out
- Contamination of the capstan or pinch roller.

Incomplete erasure
- Contamination of the erase head.

Increase of noise or erasure of high frequencies
- Magnetic build-up on the head.

Unbalanced tone in higher frequencies
- Improper setting of the DOLBY NR switches. When playing back, set the switches to the same position used in recording.
- Improper setting of the TAPE SELECT switch. Depress the TAPE SELECT switch when using a TYPE III (Fe-Cr) cassette or a TYPE IV (METAL) cassette which has no METAL tape detector slots.

HOWLING OR HUM NOISE

Oscillation occurs when trying to record from microphones.
- The microphone is too near the loudspeakers. Move the microphone away from the loudspeakers or reduce the amplifier volume.

Hum noise
- The tape deck is stacked on or under the amplifier. Separate the units.

SECTION 1
BLOCK DIAGRAM

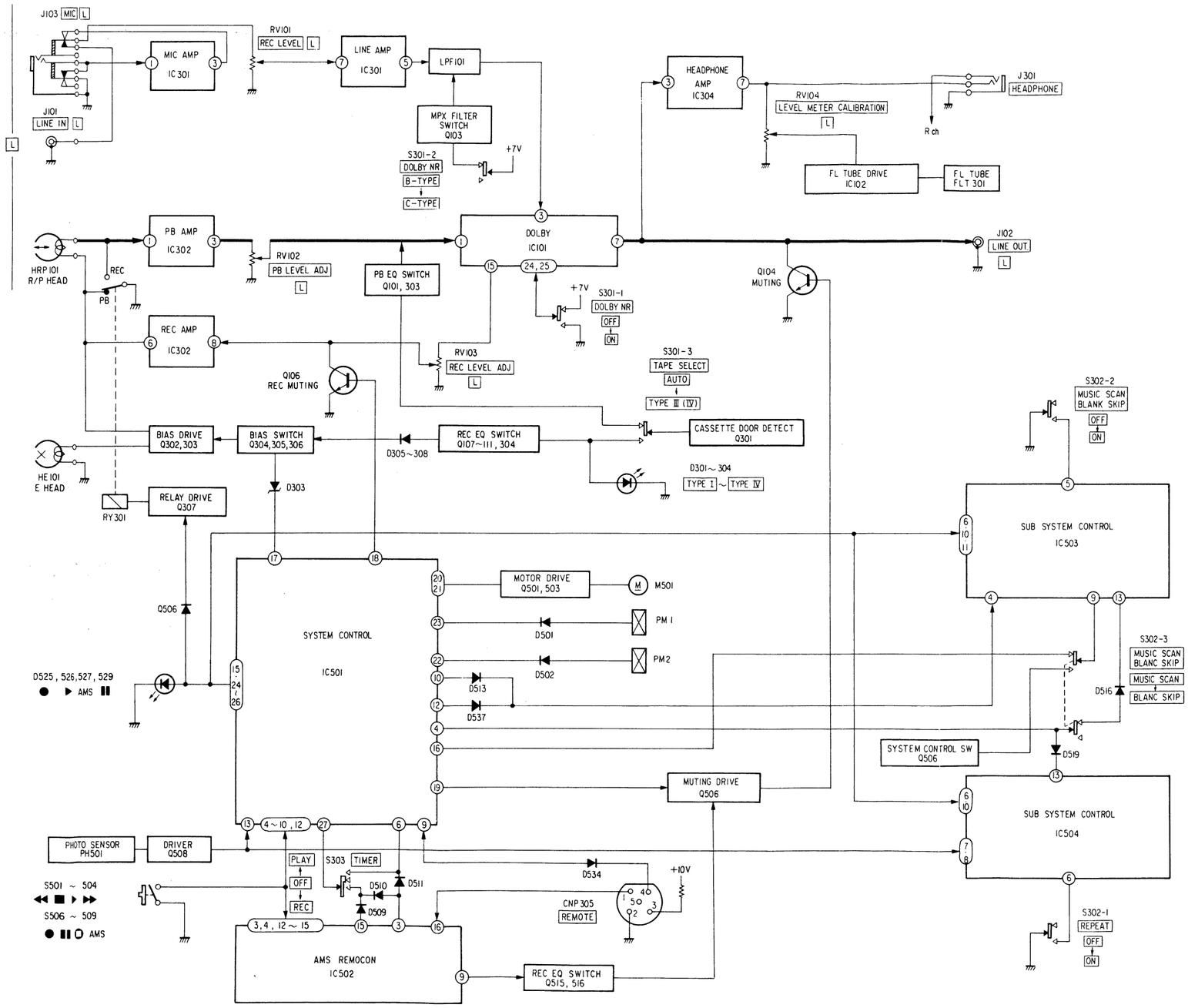

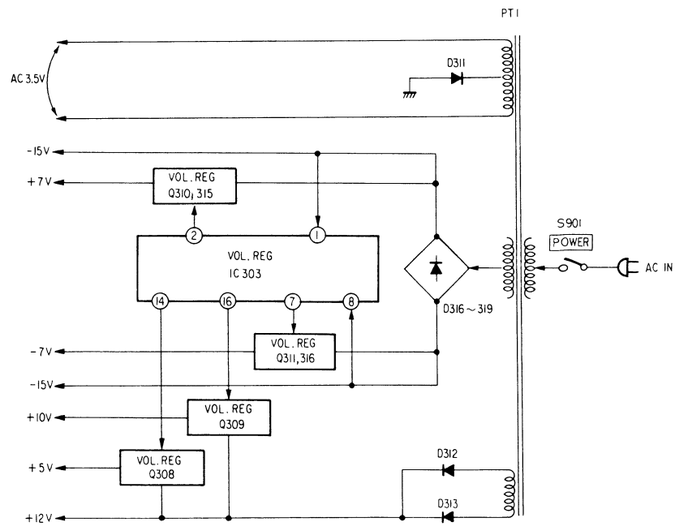

MEMO

SECTION 2
DISASSEMBLY

- Follow the disassembly procedure in the numerical order given.

REMOVE THE TOP COVER AND THE BOTTOM PLATE.

CASSETTE WINDOW/FRONT PANEL

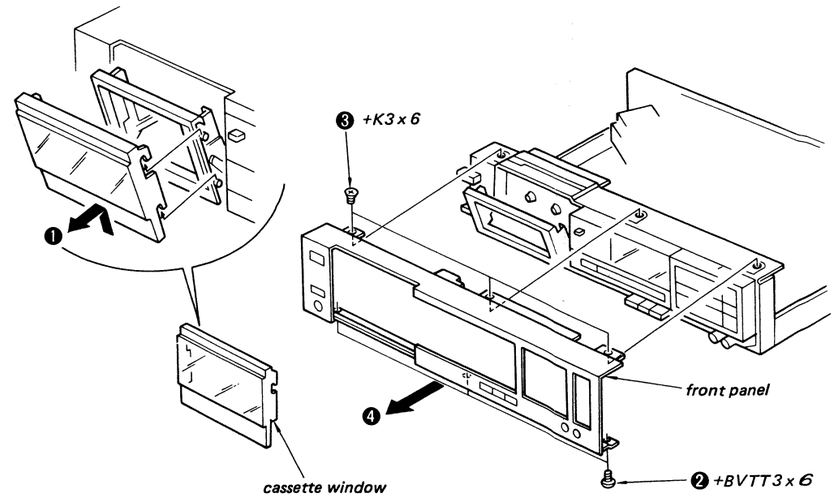

CASSETTE HOLDER/FULCRUM PLATE/SIDE PLATE (R/L)/PISTON

❶ – ❹,❾,❿ Side plate (R/L)
❻,❼ Cassette holder

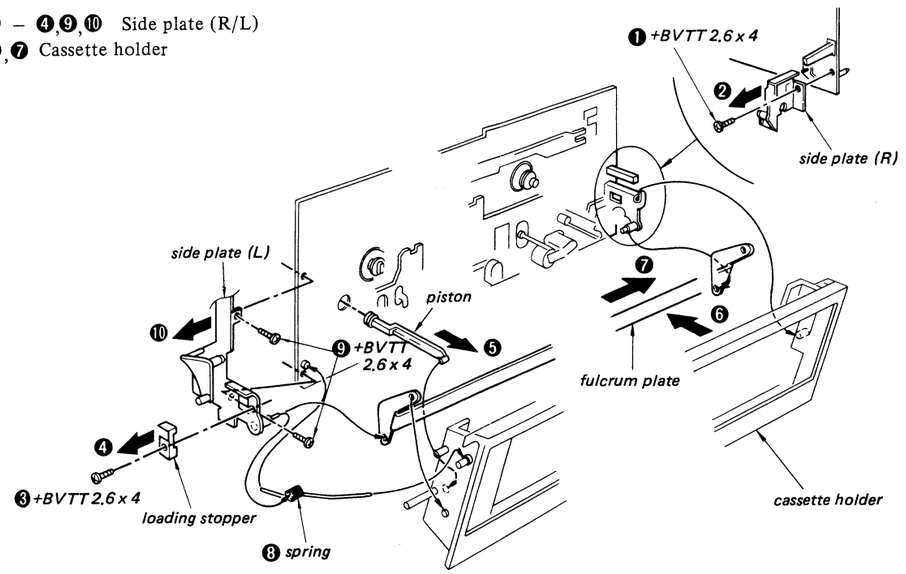

COUNTER/SW BOARD/METER UNIT

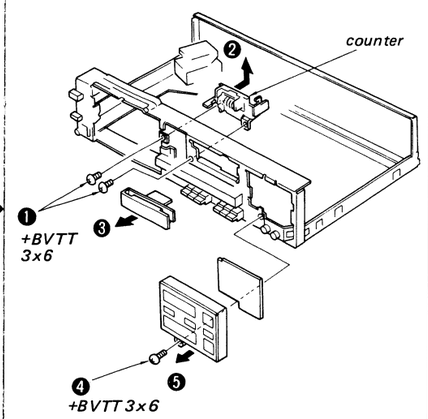

VOLUME BOARD/AUDIO BOARD

❶ – ❻ Volume board
❼ – ❿ Audio board

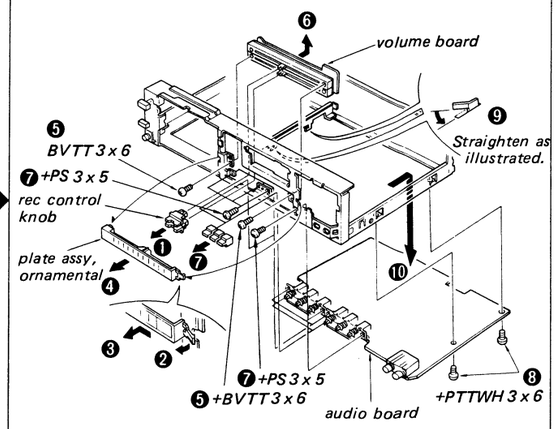

MECHANISM SECTION

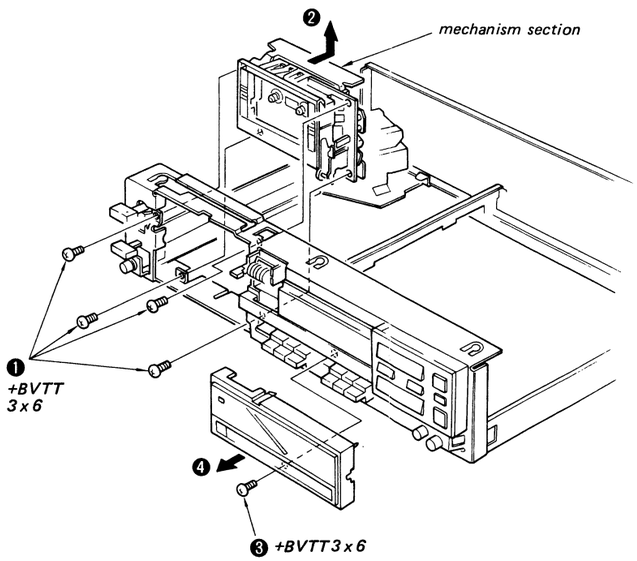

PINCH ROLLER/SPRING

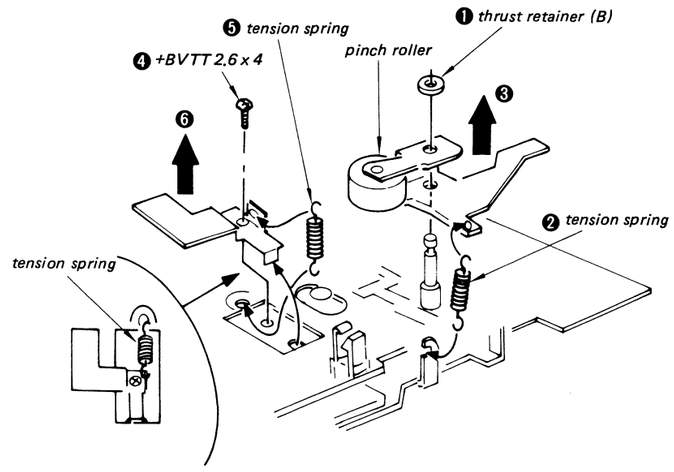

HEAD CHASSIS/PAUSE SLIDER

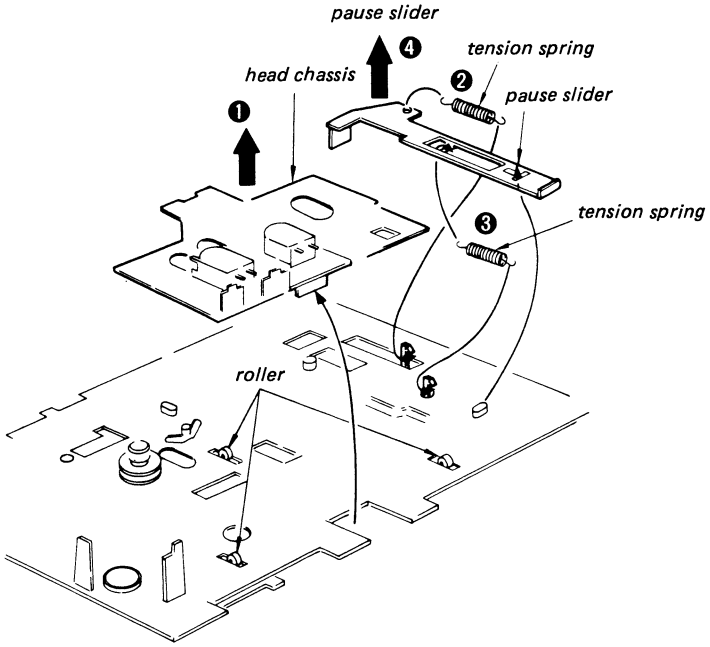

THRUST RETAINER/CAPSTAN BELT/FAST FORWARD BELT

❶,❷ thrust retainer

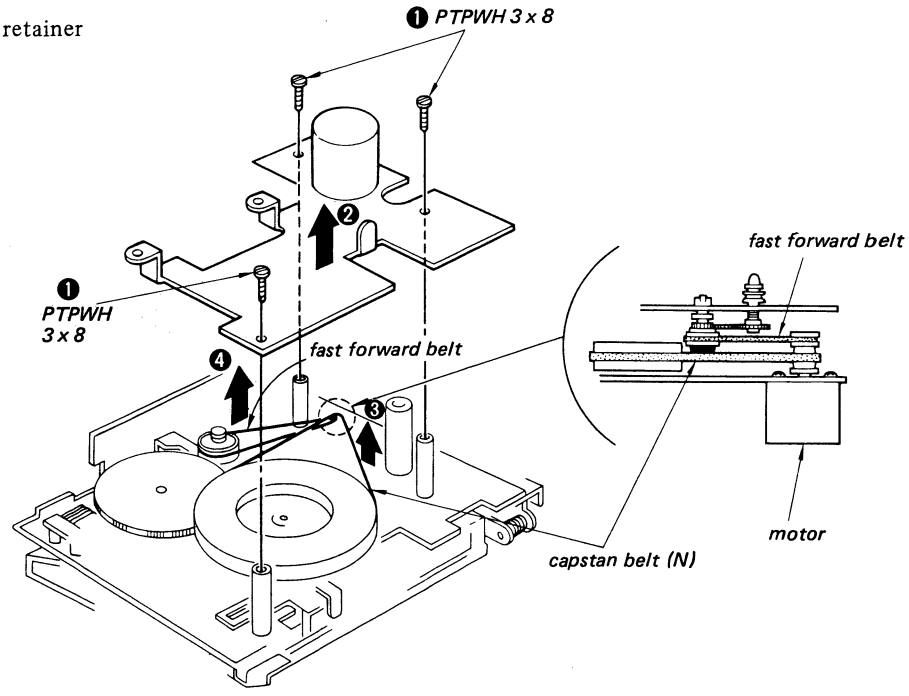

SECTION 3
ADJUSTMENTS

3-1. MECHANICAL ADJUSTMENTS

PRECAUTION

1. Clean the following parts with a denatured-alcohol-moistened swab:

record/playback head	pinch roller
erase head	rubber belts
capstan	idlers

2. Demagnetize the record/playback head with a head demagnetizer.
3. Do not use a magnetized screwdriver for the adjustments.
4. After the adjustments, apply suitable locking compound to the parts adjusted.
5. The adjustments should be performed with the rated power supply voltage unless otherwise noted.

Head Height Adjustment

1. Prepare an adjustment cassette as shown below.

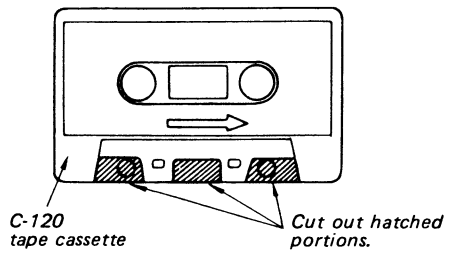

2. In playback mode and viewing from the front, adjust the head heights to eliminate tape curl and tape twist at portions of the arrow.

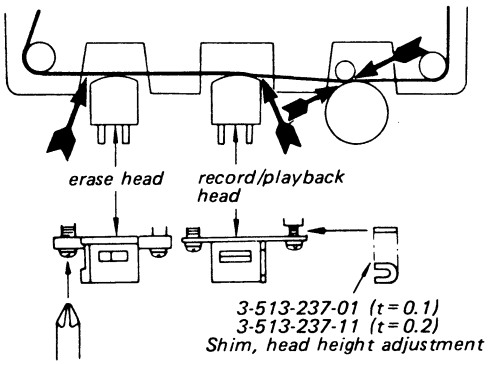

Torque Measurement

Torque	Torque meter	Meter reading
Forward	CQ102C	28 – 60 g·cm (0.38 – 0.83 oz·inch)
Back Tension	CQ102C	2.5 – 6 g·cm (0.03 – 0.07 oz·inch)
Fast Forward and Rewind	CQ-201B	80 – 165 g·cm (1.1 – 2.2 oz·inch)

Pinch Roller Pressure Measurement

– Playback Mode –

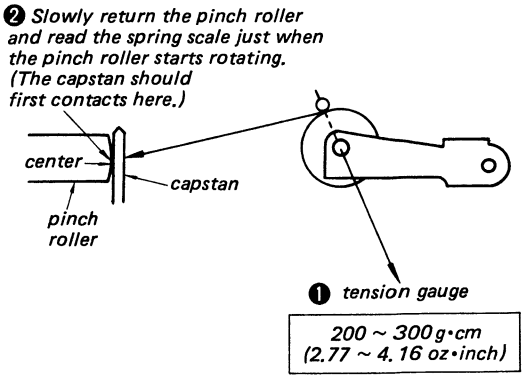

Soft Eject Adjustment

Specification

Eject time
0.4 ~ 2.5 sec.

Set the tape (C-90) and adjust the adjustment screw so that the EJECT TIME is within the specification.

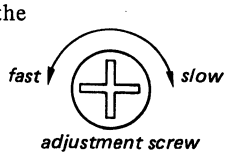

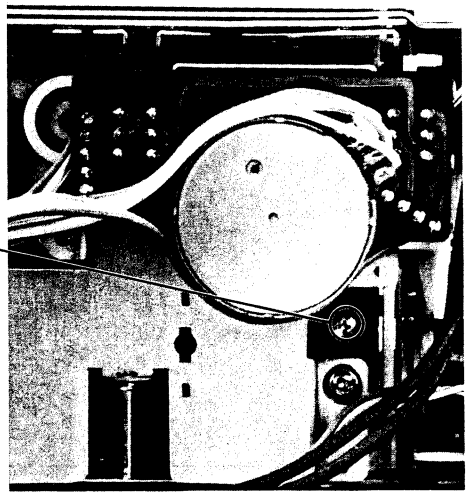

3-2. ELECTRICAL ADJUSTMENTS

Note: The adjustment should be performed in the order given in this service manual. The adjustments should be performed for both L-CH and R-CH.

- Set the BIAS and EQ switches according to the tape as follows.

Tape	TAPE SELECT switch	LED display
CS-15	AUTO	I: NORM
CS-26	AUTO	II: CrO_2
CS-30	Fe-Cr (METAL)	III: Fe-Cr
CS-40	AUTO Fe-Cr (METAL)	IV: METAL

- Switches and controls should be set as follows unless otherwise specified.

  DOLBY NR switch: OFF
  TAPE switch: AUTO (I: NORM)

- Standard Record:

  Deliver the standard input signal level to the input jack and set the REC LEVEL control to obtain the standard output signal level.

Standard Input Level

	MIC	LINE IN
source impedance	300Ω	10 kΩ
input level	0.77 mV (–60 dB)	0.25 V (–10 dB)

Standard Output Level

	HEADPHONES	LINE OUT
load impedance	8Ω	47 kΩ
output level	31 mV (–26 dB)	0.435 V (–5 dB)

Capstan motor Speed Adjustment

Procedure:

Mode: playback

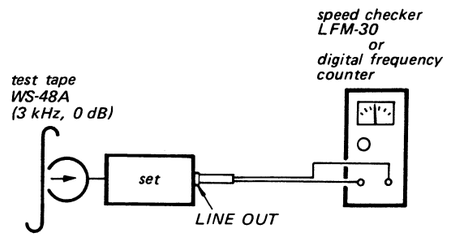

Specification:

Speed checker	Digital frequency counter
-0.8 ~ +0.8%	2975 ~ 3025 Hz

Frequency difference between the beginning and the end of the tape should be within 0.84% (25 Hz).

Adjustment Location:

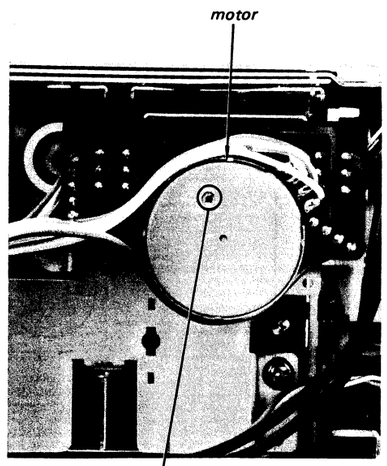

Adjust the speed by using screwdriver. When turning the screw clockwise, speed is faster.

Record/playback Head Azimuth Adjustment

Procedure:

1. Mode: Playback

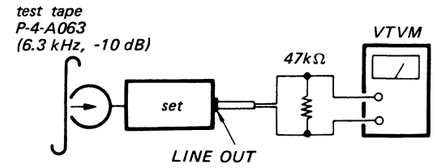

2. Turn the adjustment screw for the maximum output levels. If these levels do not match, turn the adjustment screw until both of output levels match together within 0.5 dB.

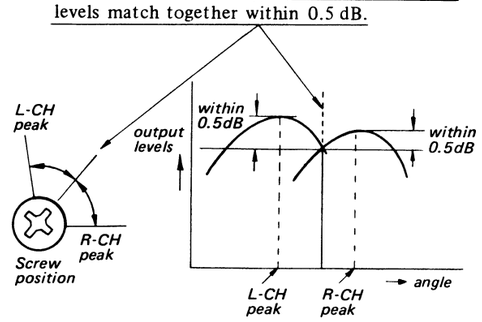

3. Phase Check
   Mode: playback

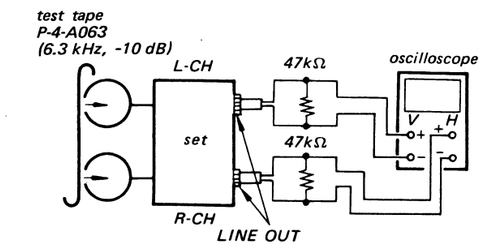

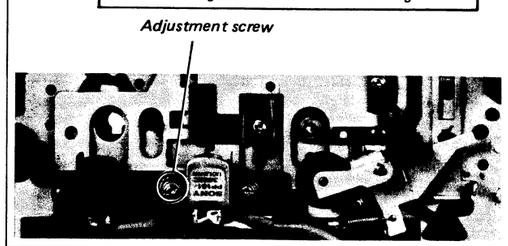

Playback Level Adjustment

Procedure:

Mode: playback

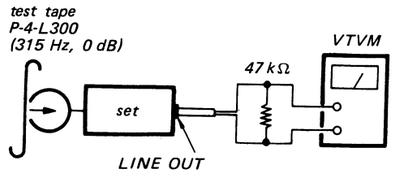

Specification:

LINE OUT level: 0.41 ~ 0.46 V
(–5.5 ~ –4.5 dB)
Level difference between channels:
less than 0.5 dB

Check that the LINE OUT level does not change in playback mode while changing the mode from playback to stop several times.

Adjustment Location:

– AUDIO board –

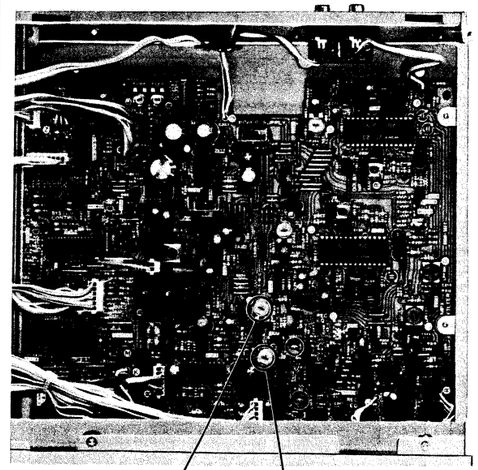

Record Bias Adjustment

Setting:

REC LEVEL control: standard record
(See page 15)

Procedure:

1. Mode: record

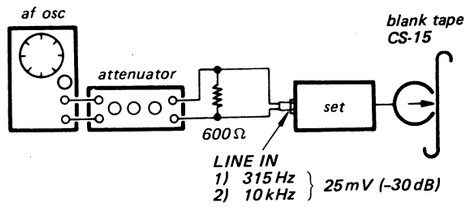

2. Mode: playback

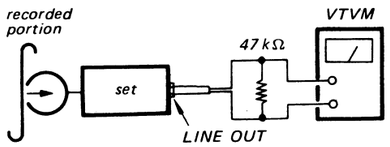

Adjust CT101, CT201 so that the LINE OUT level of 10 kHz signal is 0 dB relative to that of 315 Hz.

Adjustment Location:

– AUDIO board –

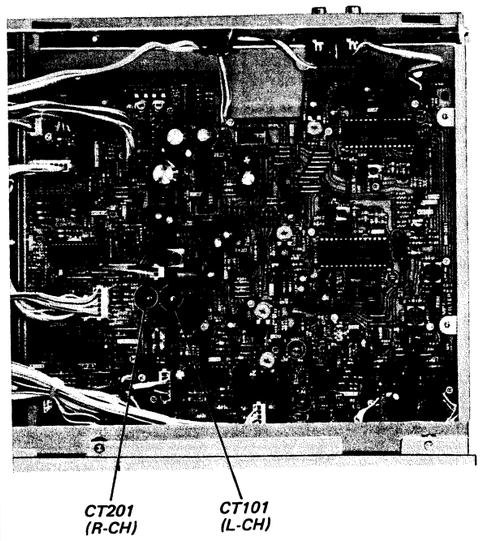

Record Level Adjustment

Setting:

REC LEVEL control: standard record
(See page 15)

Procedure:

1. Mode: record

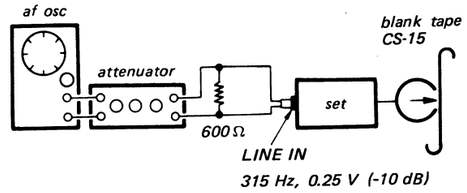

2. Mode: playback

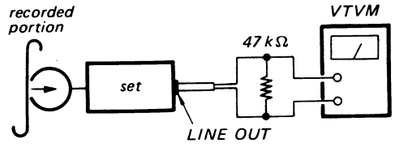

Specification:

LINE OUT level: 0.41 ~ 0.46 V
(-5.5 ~ -4.5 dB)

Adjustment Location:

– AUDIO board –

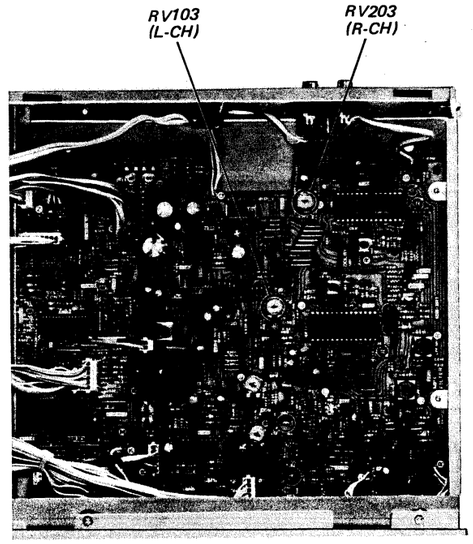

Level Meter Calibration

Procedure:

1. Mode: record

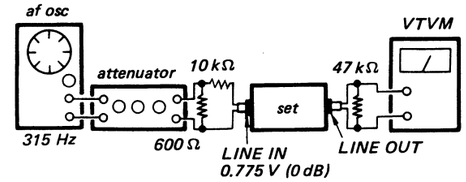

2. Set the REC LEVEL control so that the LINE OUT level is 0.44 V (-5 dB).
3. Adjust RV104 and RV204 so that the light in the 6th segment from the left of the LEVEL meter goes on.
4. Set the REC LEVEL control so that the LINE OUT level is 1.7 V (7 dB). Make sure that lights in the segments go on.

Note: Slide the REC LEVEL control rightward slowly.

Adjustment Location:

– AUDIO board –

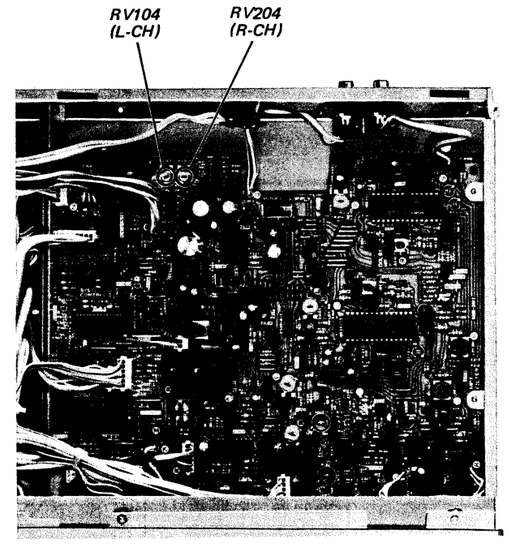

• Semiconductor Lead Layouts

2SC945-P
2SC2001

2SA1175

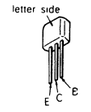

2SA1027R

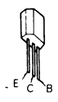

10E2
1SS133
HZ4B1
HZ9A2L

2SD809-K
2SB731

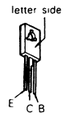

GL-9NG2

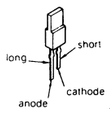

CX20027

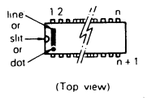

SLR34URC5
SLR34PC5
SLR34DC5

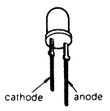

M5218L

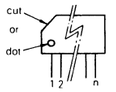

SPI201-20

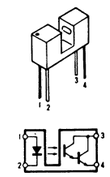

CX20028
CX10035
CX10034
BA6146
TC9310N-015
TC9305P-003
CX10032A
CX10033A

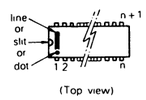

4-1. MOUNTING DIAGRAM — *Conductor Side* —

Q , IC	D
IC304	311
515	
516	319
206	318
IC201 311 IC502	317 537
316	316 513
	314
IC303	
	313
	312
	315
315	
204 310,309	
506	508,507
508	534
104	510
	509
	511
IC101 304 IC501	309
303	
IC102 106	506
IC202 302	
	PH501
305 501	501
306 503	502
307	
	304,303
	302,301
103,313,111	310 539
201	
109	
108	
110	
107	517 518
	516 519
IC301 IC302	515
IC503	
IC504	
510	

【PIN JACK BOARD】

【FL METER BOARD】

FLT 301 (FLUORESCENT INDICATOR TUBE)

【VOLUME BOARD】

【AUDIO BOARD】

P Q R S T U V W X Y Z A1 B1 C1 D1

1 2 3 4 5 6 7 8 9 10

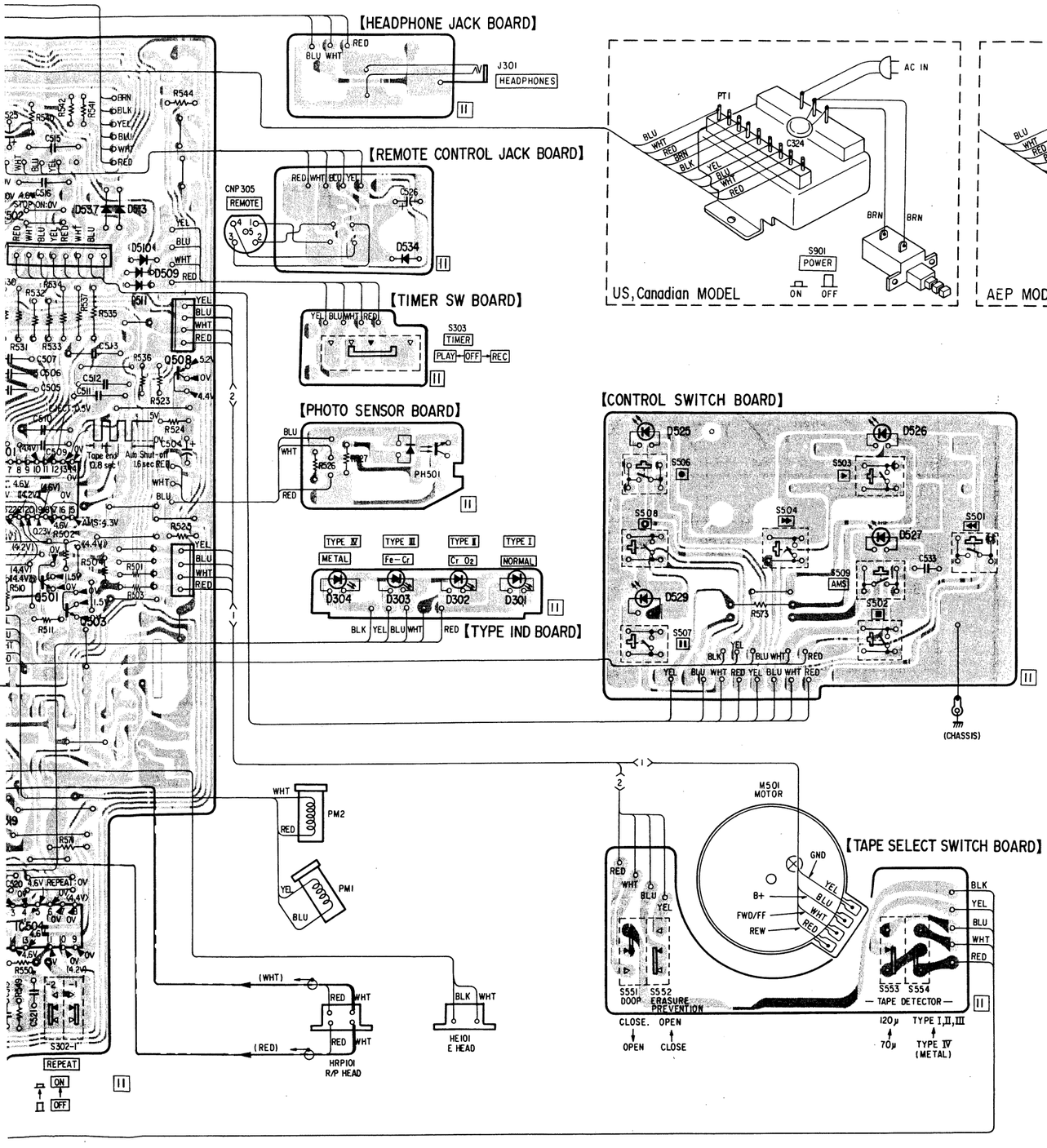

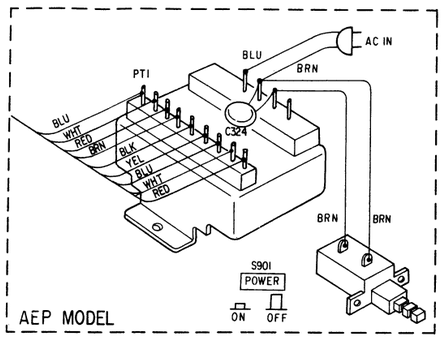

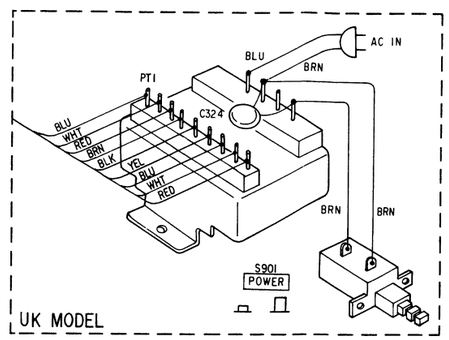

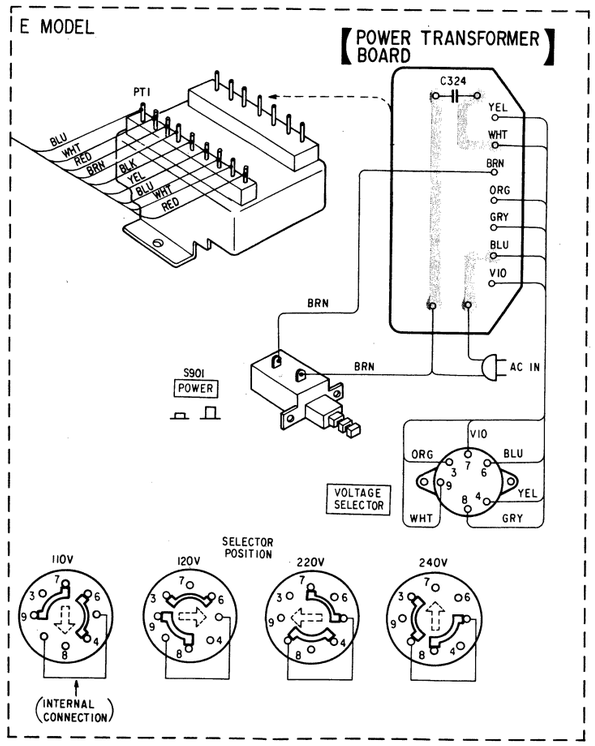

Q, IC	D
211, 301	308
314	307
209, 207	
210, 208	306
	305

Note:

- Color code of sleeving over the end of the jacket.

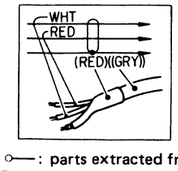

- ▒ : B + pattern
- ▬▶▬ : signal path
- ▬▶▬ : L-CH signal path
- ▬▶▬ : R-CH signal path
- ○— : parts extracted from the component side.
- [ ]— : indicates side identified with part number.
- Ⓕ : fusible resistor.

4-2. SCHEMATIC DIAGRAM

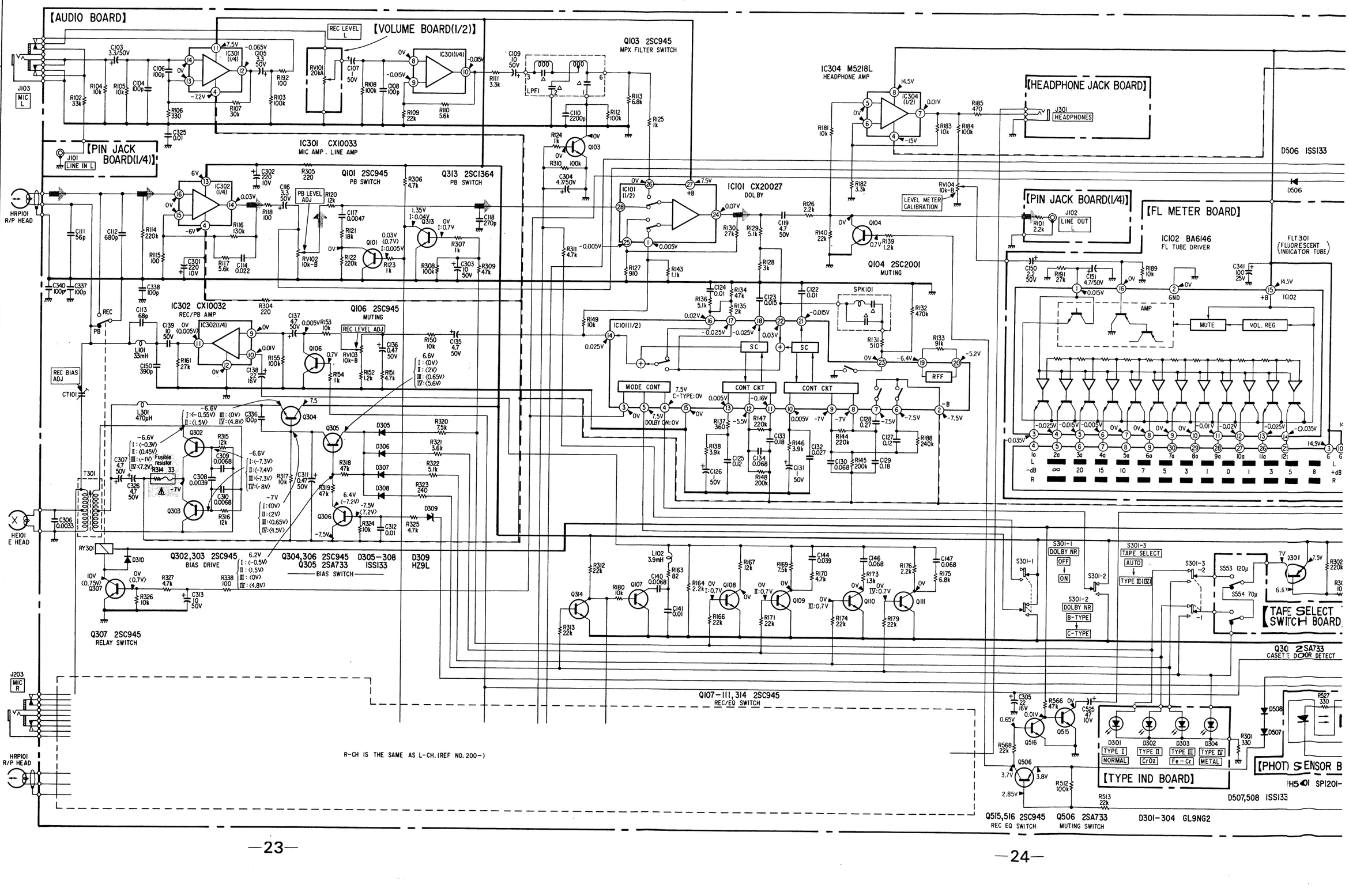

N O P Q R S T U V W X Y Z A1 B1 C1 D

BOARD]

D506 ISS133

D506

[FL METER BOARD]

IC102 BA6146
FL TUBE DRIVER

FLT301
(FLUORESCENT INDICATOR TUBE)

FLT301

[TYPE IND BOARD]

D301 TYPE I NORMAL
D302 TYPE II CrO2
D303 TYPE III Fe-Cr
D304 TYPE IV METAL

D301-304 GL9NG2

Q510 2SC945
SWITCH

IC502 CXI0034
RMS REMOCON

S302-3
MUSIC SCAN/BLANK SKIP
BLANK SKIP
MUSIC SCAN

D516 ISS133

IC502

[TIMER SW BOARD]

S303
TIMER
PLAY
OFF
REC

D509-511
ISS133

IC504

D519 ISS133

D518 ISS133

IC503,504 TC9305P-003
SUB SYSTEM CONTROL

S302-1
REPEAT
OFF
ON

S302-2
MUSIC SCAN
BLANK SKIP
OFF
ON

IC503

[REMOTE CONTROL JACK BOARD]

CNP305

D534 REMOTE

D513,534,537
ISS133

D515,517 ISS133

[CONTROL BUTTON BOARD(1/2)]

S501 S502 S503 S504 S506 S508 S509 AMS S507

S301-3
TAPE SELECT
AUTO
TYPE III (IV)

[TAPE SELECT SWITCH BOARD]

S553 120μ
S554 70μ
S552
S551

Q301 2SA733
CASETTE DOOR DETECT

IC501

IC501 TC9310N-015.
SYSTEM CONTROL

D501,502 ISS133

PM1
PM2
M501

Q501,503 2SC945
MOTOR DRIVE

[CONTROL BUTTON BOARD(1/2)]

D525 SLR-34URC5
D526,527 SLR-34PC5
D529 SLR-34DC5

[PHOTO SENSOR BOARD]

PH501 SPI201-20

Q508 2SC733
DRIVER

D507,508 ISS133

D311 HZ4BAC 3.5V

Q311 2SB731
Q316 2SA733

Q310 2SD809
Q315 2SC945

VOL. REG

IC303 CXI0035
VOL. REG

IC303

D316-319
10E2

D312-314
10E2

Q308,309 2SD809
VOL. REG

D315 ISS133

110V
220V
SELECTI

E MODEL
AEP, UK
UK MODEL
AEP MODEL

US, Canadi

TC-FX45

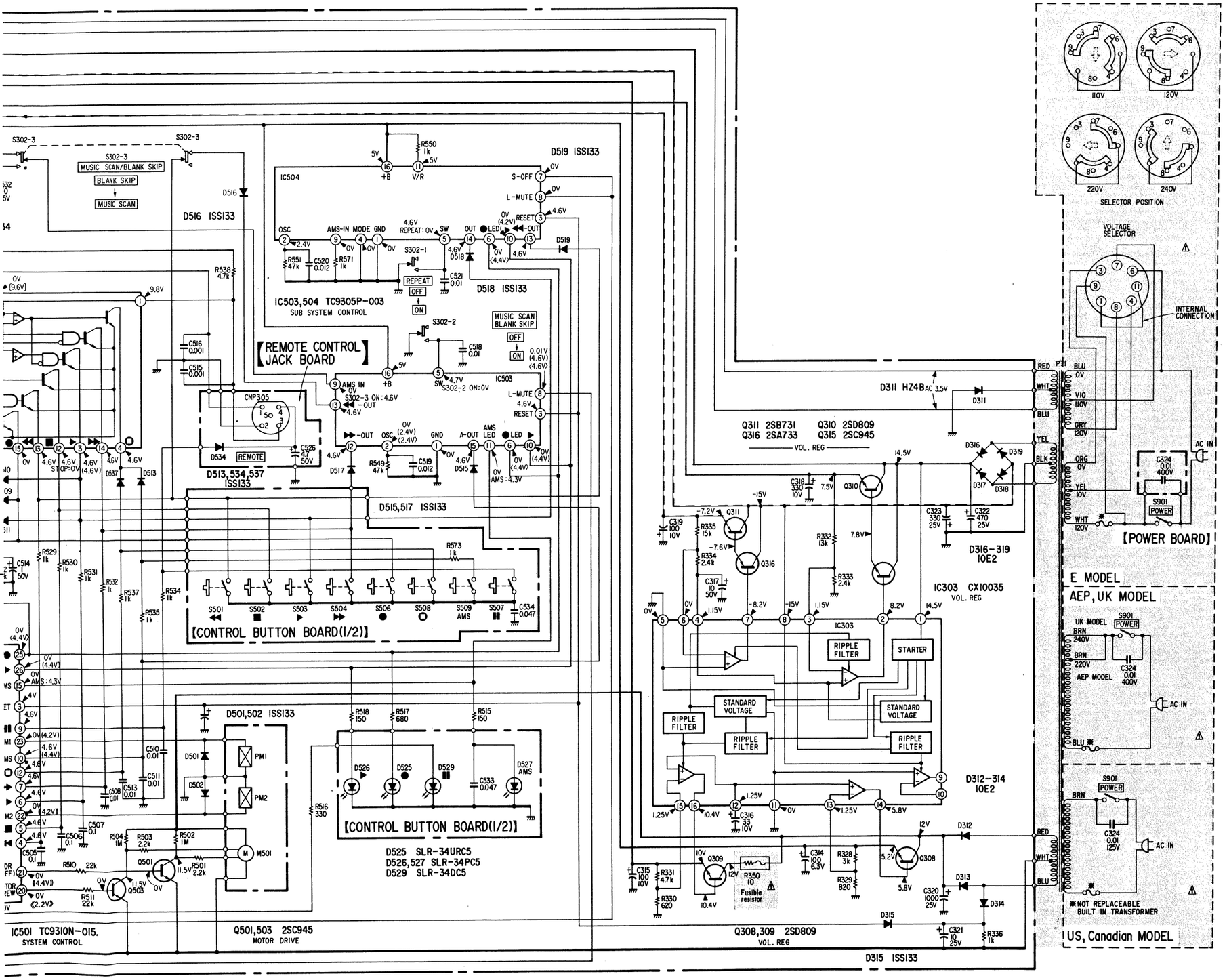

Note:

- Components for right channel have same values as for left channel. Reference numbers are coded from 200.
- All capacitors are in μF unless otherwise noted. pF: μμF 50WV or less are not indicated except for electrolytics and tantalums.
- All resistors are in ohms, 1/4W unless otherwise noted. kΩ : 1000 Ω, MΩ : 1000 kΩ
- Ⓕ : fusible resistor.
- △ : internal component.
- ▭ : panel designation.
- ▭ : adjustment for repair.
- ——— : B+ bus.
- – – – : B– bus.
- Voltages are dc with respect to ground unless otherwise noted.
- Readings are taken under no-signal conditions.
  - No mark: STOP ■
  - ( ) : PLAY ▶
  - [ ] : PAUSE ⏸
  - < > : REC ●
  - (( )) : FF ▶▶
  - ≪ ≫ : REW ◀◀
  - I : TYPE-I
  - II : TYPE-II
  - III : TYPE-III
  - IV : TYPE-IV
- Voltage variations may be noted due to normal production tolerances.
- AC voltage readings in the bias oscillator with a VTVM.
- Switches

Ref. No.	Switch	Position
S301-1	DOLBY NR	OFF
S301-2	DOLBY NR	B-TYPE
S301-3	TAPE SELECT	AUTO
S302-1	REPEAT	OFF
S302-2	MUSIC SCAN/BLANK SKIP	OFF
S302-3	MUSIC SCAN/BLANK SKIP	BLANK SKIP
S303	TIMER	OFF
S501	◀◀	OFF
S502	■	OFF
S503	▶	OFF
S504	▶▶	OFF
S506	●	OFF
S507	⏸	OFF
S508	○	OFF
S509	AMS	OFF
S551	⏏	CLOSE
S552	ERASER PREVENTION	CLOSE
S553	TAPE DETECTOR	CLOSE
S554	TAPE DETECTOR	TYPE IV (METAL)
S901	POWER	OFF

- ➡ : signal path

Note: The components identified by shading and mark ⚠ are critical for safety. Replace only with part number specified.

Note: Les composants identifiés par une trame et une marque ⚠ sont critiques pour la sécurité. Ne les remplacer que par une pièce portant le numéro spécifié.

Note: Voltages are measured with a VOM (50kΩ/V).

SECTION 5
EXPLODED VIEWS AND PARTS LIST

(1)

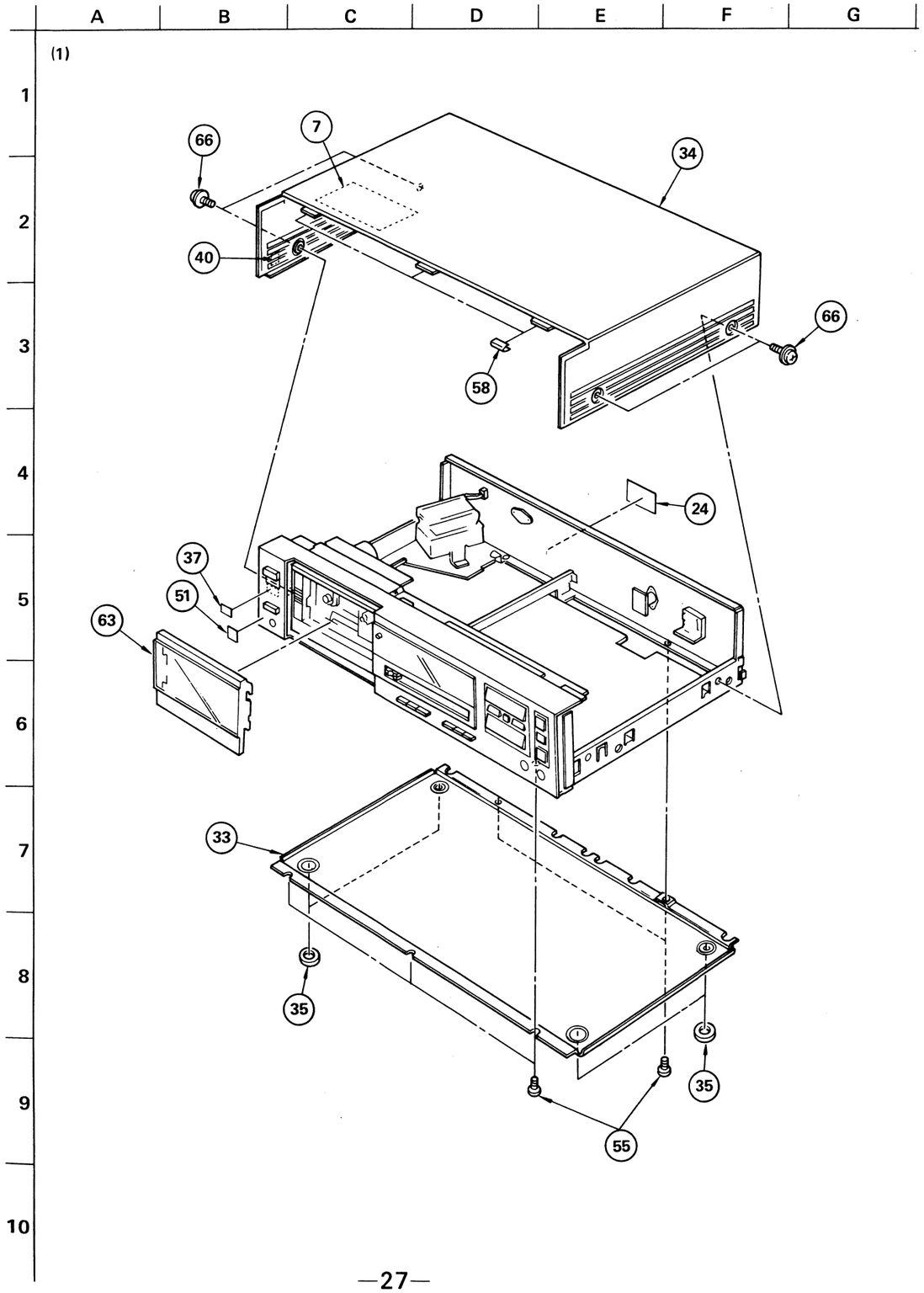

(2)

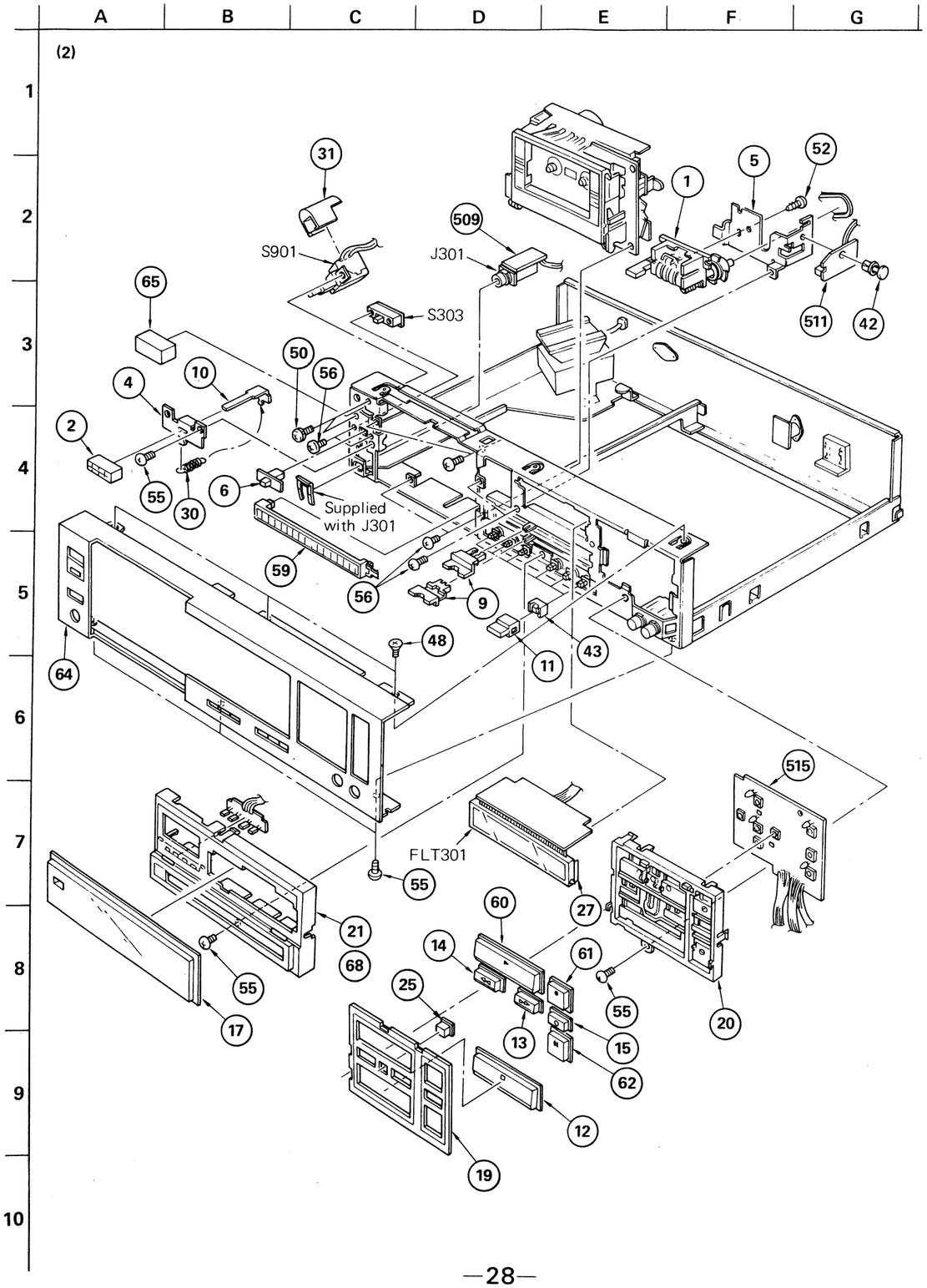

(3)

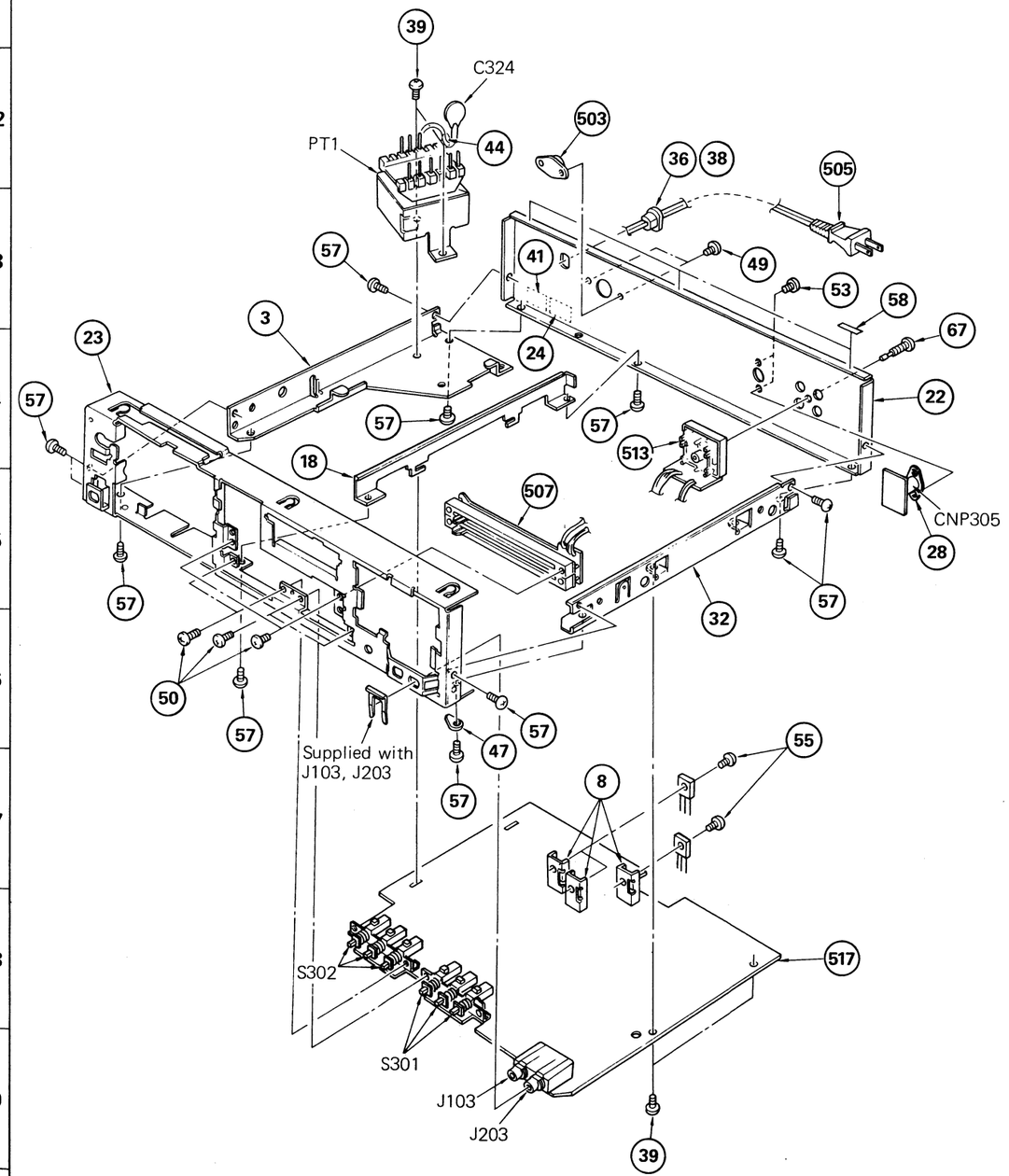
39
C324
PT1
44
503
36
38
505
57
41
49
53
58
67
3
23
24
22
57
57
57
513
18
507
CNP305
28
57
32
57
50
57
Supplied with
J103, J203
47
57
55
8
517
S302
S301
J103
J203
39

(4)

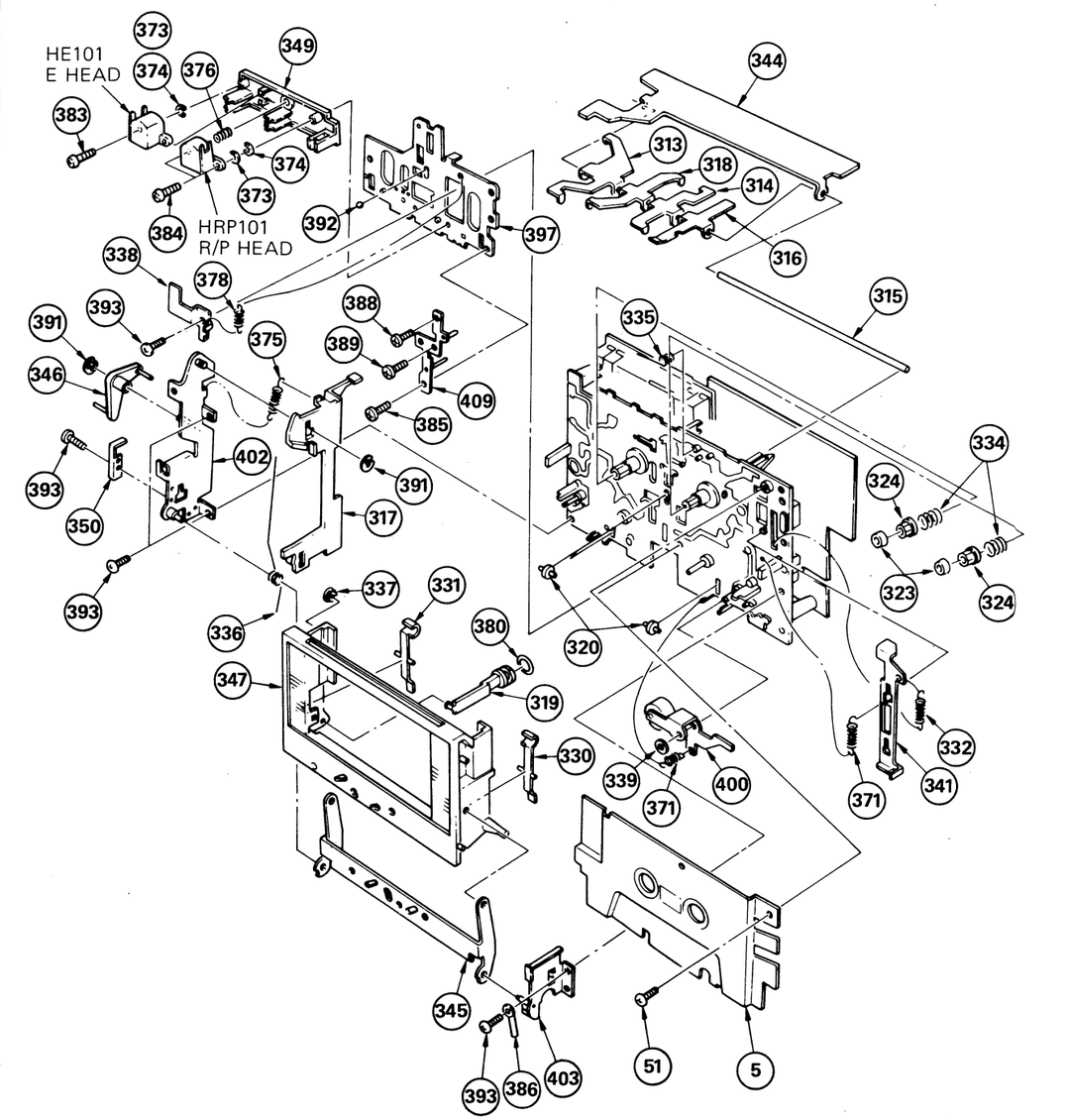
HE101
E HEAD
373
374
376
349
344
383
374
313
318
314
373
384
HRP101
R/P HEAD
392
397
316
338
378
315
393
388
391
375
335
389
346
409
385
402
334
324
393
391
317
350
323
324
337
331
336
380
320
347
319
330
339
400
371
332
371
341
345
393
386
403
51
5

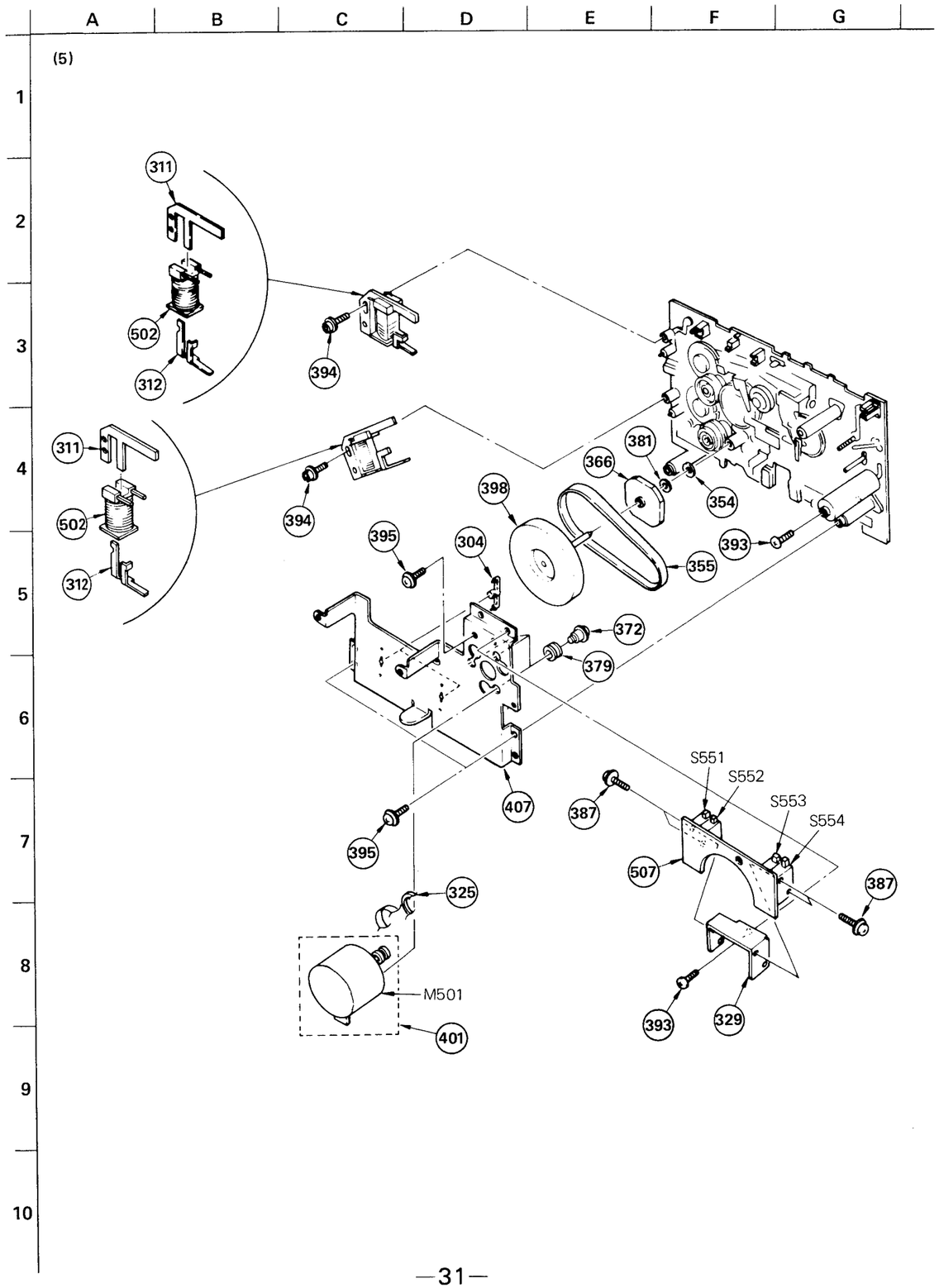
(5)
A B C D E F G
1 2 3 4 5 6 7 8 9 10
311
502
312
394
381
366
354
398
395
304
393
355
372
379
407
387
S551
S552
S553
S554
507
325
M501
401
329

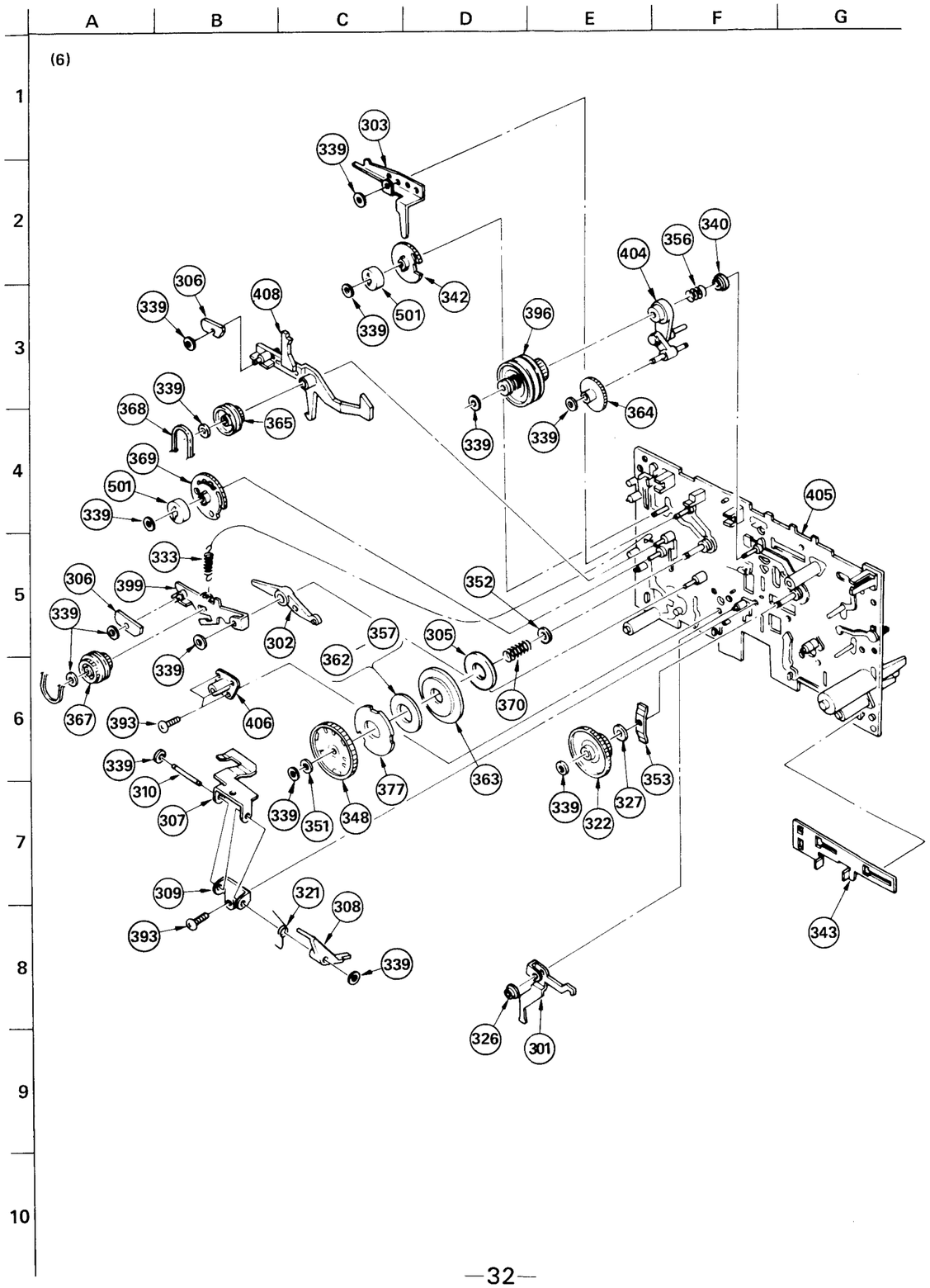
(6)
A B C D E F G
1 2 3 4 5 6 7 8 9 10
303
339
340
356
404
342
501
306
408
396
368
365
364
369
405
333
352
399
302
357
305
362
370
367
406
363
310
307
351
348
377
353
327
322
309
321
308
343
326
301

GENERAL SECTION

No.	Part No.	Description
1	1-548-574-00	COUNTER, TAPE (NORMAL TYPE)
2	3-304-419-41	BUTTON, EJECT
3 ♦	3-304-423-00	PLATE, SIDE, LEFT
4 ♦	3-307-517-00	GUIDE, SLIDER
5	3-307-533-00	PLATE, ORNAMENTAL, MD
6	3-307-538-51	KNOB, SWITCH, TIMER
7	3-307-563-01	SHEET, VIBRATION PROOF
8 ♦	3-312-615-31	HEAT SINK
9	3-313-213-11	BUTTON, REC CONTROL
10 ♦	3-315-102-00	PLATE, SLIDE
11	3-315-105-00	KNOB (5X16), SQUARE
12	3-315-112-11	BUTTON, STOP
13	3-315-113-11	BUTTON, FF
14	3-315-114-11	BUTTON, REW
15	3-315-117-11	BUTTON, REC MUTE
16 ♦	3-315-118-00	BRACKET, COUNTER
17	3-315-119-11	WINDOW, METER
18 ♦	3-315-120-00	PLATE, RELAY
19	3-315-121-11	ESCUTCHEON, CONTROL BUTTON
20 ♦	3-315-122-00	HINGE, CONTROL BUTTON
21	3-315-124-00	ESCUTCHEON, METER
22 ♦	3-315-125-32	(US,Canadian)....PLATE, JACK
22 ♦	3-315-125-42	(AEP,G-AEP,UK)...PLATE, JACK
22 ♦	3-315-125-52	(E1,E2).....PLATE, JACK
23 ♦	3-315-127-00	CHASSIS, AMPLIFIER
24	3-315-128-00	(AEP,G-AEP).....LABEL, MODEL NUMBER (AEP1)
24	3-315-129-00	(UK).....LABEL, MODEL NUMBER (UK)
24	3-315-130-00	(E1,E2).....LABEL, MODEL NUMBER (E1,E2)
24	3-315-131-00	(US,Canadian)...LABEL, MODEL NUMBER (U,CND)
25	3-315-132-00	BUTTON, AMS
26 ♦	3-315-146-00	HOLDER, LED
27	3-315-153-00	CUSHION
28 ♦	3-315-156-00	SPACER, REMOTE CONTROL
29	3-480-135-00	BELT
30	3-540-244-00	SPRING, TENSION
31	3-575-524-00	COVER, POWER SWITCH
32 ♦	3-575-529-11	PLATE, SIDE, RIGHT
33 ♦	3-575-538-31	PLATE, BOTTOM
34	3-575-539-00	COVER, TOP
35	3-576-731-11	FELT (H)
36	3-701-682-00	(US,Canadian,E1,E2)...STOPPER, CORD
37	3-701-690-00	(UK)....LABEL (MADE IN JAPAN)
38	3-703-244-00	(AEP,G-AEP,UK)....BUSHING, CORD
39	3-703-249-01	SCREW, S TIGHT, +PTTWH 3X6

GENERAL SECTION

No.	Part No.	Description
40 ♦	3-703-680-00	(US)....LABEL, CAUTION, SUB, NEW UL
41	3-703-710-01	STICKER, SONY SYMBOL (12)
42	4-812-134-00	RIVET, NYLON, 3.5
43	4-864-307-00	RING
44	4-875-455-01	(AEP,G-AEP,UK,E1,E2)...COVER (DIA.20), CAPACITOR
45	4-889-321-01	SCREW
46	7-621-770-87	SCREW +P 2.6X5
47	7-623-508-01	LUG, 3
48	7-682-247-13	SCREW +K 3X6
49	7-682-546-09	(E1,E2)....SCREW +B 3X5
50	7-682-646-01	SCREW +PS 3X5
51	7-685-104-19	SCREW +P 2X6 TYPE2 NON-SLIT
52	7-685-533-21	SCREW +BTP 2.6X6 TYPE2 SLIT
53	7-685-550-19	SCREW +BTP 3X16 TYPE2 N-S
54	7-685-647-79	SCREW +BVTP 3X10 TYPE2 SLIT
55	7-685-871-01	SCREW +BVTT 3X6 (S)
56	7-685-871-09	SCREW +BVTT 3X6 (S)
57	7-688-004-11	W 4, MIDDLE
58	9-911-837-XX	CUSHION (B), FILTER
59	X-3315-105-0	PLATE ASSY, ORNAMENTAL
60	X-3315-112-0	BUTTON ASSY, FWD
61	X-3315-113-0	BUTTON ASSY, REC
62	X-3315-114-0	BUTTON ASSY, PAUSE
63	X-3315-115-0	WINDOW ASSY, CASSETTE
64	X-3315-116-0	PANEL ASSY, FRONT
65	X-3575-502-0	KNOB ASSY, POWER
66	3-703-354-11	SCREW (OS), TOP COVER, CLAW
67	7-685-546-19	SCREW +BTP 3X8 TYPE2 N-S
68	X-3315-117-1	ESCUTCHEON ASSY, METER

ACCESSORY & PACKING MATERIAL

No.	Part No.	Description
101	1-551-734-11	CORD, CONNECTION (RK- 74A)
102	3-315-149-00	CUSHION (LEFT, LOWER)
103	3-315-150-00	CUSHION (RIGHT, LOWER)
104	3-315-151-00	CUSHION (LEFT, UPPER)
105	3-315-152-00	CUSHION (RIGHT, UPPER)
106	3-573-625-00	SHEET, POLYETHYLENE
107	3-701-360-00	(AEP,G-AEP)...LABEL, TACK
108	3-701-630-00	BAG, POLYETHYLENE
109	3-773-485-11	(Canadian,AEP,G-AEP,UK,E1,E2) ...MANUAL, INSTRUCTION
109	3-773-485-21	(US).....MANUAL, INSTRUCTION
109	3-773-485-41	(AEP,G-AEP)...MANUAL, INSTRUCTION
110	3-793-828-11	QUESTIONNAIRE
111	8-890-454-10	(Canadian)...TAPE (UCX-S)
112	X-3701-105-0	ROD ASSY, CLEANING, HEAD
113	3-315-155-00	INDIVIDUAL CARTON

MECHANISM SECTION

No.	Part No.	Description
301 ♦	3-307-301-00	LEVER (RELAY), FWD SELECT
302	3-307-307-00	LEVER, FWD
303	3-307-308-00	LEVER, FF
304	3-307-309-00	RETAINER (A), THRUST
305	3-307-313-00	PLATE, YOKE
306	3-307-315-00	ARBOR, MOVABLE
307	3-307-319-00	RETAINER, TAKE-UP GEAR
308	3-307-328-00	LEVER, TAKE-UP SELECTION
309 ♦	3-307-329-00	PLATE, FULCRUM, SELECTION LEVER
310	3-307-330-00	PIN, FULCRUM PLATE
311	3-307-332-00	ARBOR, FIXED
312	3-307-333-00	ARBOR, TRIGGER
313 ♦	3-307-337-00	LEVER, REC DETECTION
314 ♦	3-307-338-00	LEVER, METAL DETECTION
315 ♦	3-307-339-00	SHAFT, DETECTION LEVER
316 ♦	3-307-344-00	LEVER, HALF RETAINER
317	3-307-345-00	SLIDER, EJECT
318 ♦	3-307-346-00	LEVER, DETECTION
319	3-307-347-00	PISTON
320	3-307-348-00	ROLLER
321	3-307-355-00	SPRING

MECHANISM SECTION

No.	Part No.	Description
322	3-307-360-00	GEAR (S), REEL
323	3-307-362-00	CAP, REEL
324	3-307-363-00	CLAW (N), REEL
325	3-307-366-00	BELT, FAST FORWARD
326	3-307-367-00	BUSHING, SELECT LEVER
327	3-307-369-00	FELT, LIMITER
328	.....	
329 ♦	3-307-370-00	BRACKET, SWITCH
330	3-307-371-00	SPRING (LEFT)
331	3-307-372-00	SPRING (RIGHT)
332	3-307-374-00	SPRING, TENSION
333	3-307-378-00	SPRING, TENSION
334	3-307-380-00	SPRING, COMPRESSION
335	3-307-382-00	SPRING
336	3-307-383-00	SPRING
337	3-307-390-00	BUSHING, LOADING SPRING
338	3-307-391-00	SPRING
339	3-307-394-00	RETAINER (B), THRUST
340	3-307-395-00	RETAINER, SPRING
341	3-307-397-00	SLIDER, PAUSE
342	3-307-401-00	GEAR, FF CAM
343 ♦	3-307-403-00	SLIDER, FWD
344 ♦	3-307-404-00	RETAINER, DETECTION SWITCH
345 ♦	3-307-405-00	PLATE, FULCRUM, CASSETTE HOLDER
346	3-307-406-00	LEVER, EJECT
347	3-307-407-31	HOLDER, CASSETTE
348	3-307-412-00	GEAR, TAKE-UP REEL
349	3-307-414-00	BRACKET, HEAD
350	3-307-416-00	STOPPER, LOADING
351	3-307-465-00	RETAINER, TAKE-UP
352 ♦	3-307-467-00	RETAINER, SPRING
353	3-307-475-00	PLATE, TENSION, BACK
354	3-307-482-00	WASHER, LUMILER
355	3-307-483-00	BELT (R), CAPSTAN
356	3-307-486-00	SPRING, COMPRESSION
357	3-307-493-01	SPACER
358	3-307-493-11	SPACER
359	3-307-493-21	SPACER
360	3-307-493-31	SPACER
361	3-307-493-41	SPACER
362	3-307-493-51	SPACER
363	3-307-953-00	MAGNET, REEL TABLE
364	3-307-970-00	GEAR, FR
365	3-312-405-00	PULLEY, DRIVING
366	3-312-406-00	GEAR (T), PINION

NOTE:
- Items with no part number and no description are not stocked because they are seldom required for routine service.
- Items marked " ♦ " are not stocked since they are seldom required for routine service. Some delay should be anticipated when ordering these items.
- Due to standardization, parts with part numbers (Δ-ΔΔΔ-ΔΔΔ-XX or Δ-ΔΔΔΔ-ΔΔΔ-X) may be different from those used in the set.

CAPACITORS:
MF:μF, PF:μμF.

RESISTORS
- All resistors are in ohms.
- F : nonflammable

COILS
- MMH : mH, UH : μH

SEMICONDUCTORS
In each case, U : μ, for example:
UA···: μA···, UPA···: μPA···, UPC···: μPC, UPD···: μPD···

NOTE:
- Items with no part number and no description are not stocked because they are seldom required for routine service.
- Items marked " ♦ " are not stocked since they are seldom required for routine service. Some delay should be anticipated when ordering these items.
- Due to standardization, parts with part numbers (Δ-ΔΔΔ-ΔΔΔ-XX or Δ-ΔΔΔΔ-ΔΔΔ-X) may be different from those used in the set.

CAPACITORS:
MF:μF, PF:μμF.

RESISTORS
- All resistors are in ohms.
- F : nonflammable

COILS
- MMH : mH, UH : μH

SEMICONDUCTORS
In each case, U : μ, for example:
UA···: μA···, UPA···: μPA···, UPC···: μPC, UPD···: μPD···

MECHANISM SECTION

No.	Part No.	Description
367	3-312-408-00	GEAR (B), CONVERSION
368	3-312-409-00	BELT, DRIVING
369	3-312-412-00	GEAR (B), CAM, FWD
370	3-312-429-00	SPRING, COMPRESSION
371	3-312-432-00	SPRING, TENSION
372	.....	
373	3-513-237-01	PLATE
374	3-513-237-11	PLATE
375	3-531-541-00	SPRING, TENSION
376	3-539-237-00	SPRING (3), COMPRESSION
377	3-561-827-00	PLATE (A), HYSTERESIS
378	3-570-895-02	SPRING, TENSION
379	.....	
380	3-575-392-00	RING, PISTON
381	3-701-438-11	WASHER, 2.5
382	.....	
383	3-701-465-00	SCREW, LOCK
384	3-701-466-00	SCREW, LOCK
385	3-701-467-00	SCREW, LOCK
386 ♦	3-701-822-00	HOLDER, WIRE
387	7-621-760-05	+PSW, 2.6X16
388	7-621-770-20	SCREW +B 2X5
389	7-621-772-00	SCREW +B 2X3
390	.....	
391	7-624-105-04	STOP RING 2.3, TYPE -E
392	7-671-111-11	STEEL BALL 1.5MM
393	7-685-860-04	SCREW +BVTT 2.6X4 (S)
394	7-687-204-21	TOTSU PTPWH 2X6 NON-SLIT, TYPE2
395	7-687-246-21	SCREW, TOTSU PTPWH 3X8, TYPE2
396	A-2142-022-A	PULLEY ASSY, FR
397	X-3307-301-0	CHASSIS (N) ASSY, HEAD
398	X-3307-302-5	FLYWHEEL (N) ASSY
399 ♦	X-3307-305-0	LEVER ASSY, FWD LOCK
400	X-3307-307-0	PINCH ROLLER (N) ASSY
401	X-3307-308-3	MOTOR (N) ASSY
402 ♦	X-3307-309-0	PLATE (LEFT) ASSY, SIDE
403 ♦	X-3307-310-0	PLATE (RIGHT) ASSY, SIDE
404	X-3307-312-0	LEVER ASSY, FR
405	X-3307-330-1	CHASSIS (N) ASSY, MECHANICAL
406	X-3307-338-0	BEARING ASSY, CAPSTAN
407 ♦	X-3307-345-0	RETAINER ASSY, THRUST
408	X-3307-348-0	LEVER ASSY, FF LOCK
409	X-3307-920-0	PLATE ASSY, ADJUSTMENT

ELECTRICAL PARTS

Ref.No.	Part No.	Description
501	1-452-202-00	MAGNET
502	1-454-316-00	SOLENOID, PLUNGER
503 ⚠	1-526-576-51	(E1,E2)...SELECTOR, POWER VOLTAGE
504	1-535-139-00	(E1,E2)...BASE POST 19MM (10MM PITCH)
505 ⚠	1-534-817-XX	(AEP,G-AEP).....CORD, POWER, EURO PLUG
505 ⚠	1-551-472-00	(E2).....CORD, POWER
505 ⚠	1-551-506-XX	(US,Canadian)...CORD, POWER
505 ⚠	1-555-734-00	(E1).....CORD, POWER
505 ⚠	1-556-562-00	(UK).....CORD, POWER
506 ⚠	1-605-860-12	(E1,E2)...PC BOARD, POWER
507 ♦	1-608-169-00	PC BOARD, TAPE SELECT SWITCH
508 ♦	1-609-914-00	PC BOARD, VOLUME
509 ♦	1-609-915-00	PC BOARD, HEADPHONE JACK
510 ♦	1-609-916-00	PC BOARD, TYPE IND
511 ♦	1-609-917-00	PC BOARD, PHOTO SENSOR
512 ♦	1-609-918-00	PC BOARD, TIMER SW
513 ♦	1-609-920-00	PC BOARD, PIN JACK
514 ♦	1-609-921-00	PC BORAD, REMOTE CONTROL JACK
515 ♦	1-609-922-00	PC BOARD, CONTROL BUTTON
516 ♦	1-609-923-00	PC BOARD, FL METER
517 ♦	A-2056-203-A	MOUNTED PC BOARD, AUDIO

C103	1-123-354-00	ELECT	3.3MF	20%	50V
C104	1-102-106-00	CERAMIC	100PF	10%	50V
C105	1-123-354-00	ELECT	3.3MF	20%	50V
C106	1-102-106-00	CERAMIC	100PF	10%	50V
C107	1-123-380-00	ELECT	1MF	20%	50V
C108	1-161-271-00	CERAMIC	100PF	5%	50V
C109	1-123-356-00	ELECT	10MF	20%	50V
C110	1-161-326-00	CERAMIC	0.0022MF	30%	50V
C111	1-107-165-00	MICA	56PF	5%	500V
C112	1-161-321-00	CERAMIC	680PF	10%	50V
C113	1-107-036-00	MICA	68PF	5%	500V
C114	1-130-624-00	FILM	0.022MF	5%	50V
C116	1-123-354-00	ELECT	3.3MF	20%	50V
C117	1-108-571-00	MYLAR	0.0047MF	5%	50V
C118	1-161-316-00	CERAMIC	270PF	10%	50V
C119	1-124-185-00	ELECT	4.7MF	20%	50V
C122	1-130-620-00	FILM	0.01MF	5%	50V
C123	1-130-622-00	FILM	0.015MF	5%	50V
C124	1-130-620-00	FILM	0.01MF	5%	50V
C125	1-130-633-00	FILM	0.12MF	5%	50V
C126	1-123-380-00	ELECT	1MF	20%	50V
C127	1-130-633-00	FILM	0.12MF	5%	50V
C128	1-130-637-00	FILM	0.27MF	5%	50V

NOTE:
- Items with no part number and no description are not stocked because they are seldom required for routine service.
- Items marked " ♦ " are not stocked since they are seldom required for routine service. Some delay should be anticipated when ordering these items.
- Due to standardization, parts with part numbers (Δ-ΔΔΔ-ΔΔΔ-XX or Δ-ΔΔΔΔ-ΔΔΔ-X) may be different from those used in the set.

CAPACITORS:
MF:μF, PF:μμF.

RESISTORS
- All resistors are in ohms.
- F : nonflammable

COILS
- MMH : mH, UH : μH

SEMICONDUCTORS
In each case, U : μ, for example:
UA···: μA···, UPA···: μPA···, UPC···: μPC, UPD···: μPD···

The components identified by shading and mark ⚠ are critical for safety. Replace only with part number specified.

Les composants identifiés par une trame et une marque ⚠ sont critiques pour la sécurité. Ne les remplacer que par une pièce portant le numéro spécifié.

ELECTRICAL PARTS

Ref.No.	Part No.	Description			
C129	1-130-635-00	FILM	0.18MF	5%	50V
C130	1-130-630-00	FILM	0.068MF	5%	50V
C131	1-123-380-00	ELECT	1MF	20%	50V
C132	1-130-625-00	FILM	0.027MF	5%	50V
C133	1-130-635-00	FILM	0.18MF	5%	50V
C134	1-130-630-00	FILM	0.068MF	5%	50V
C135	1-123-369-00	ELECT	4.7MF	20%	50V
C136	1-123-351-00	ELECT	0.47MF	20%	50V
C137	1-123-369-00	ELECT	4.7MF	20%	50V
C138	1-123-317-00	ELECT	22MF	20%	16V
C139	1-124-186-00	ELECT	10MF	20%	50V
C140	1-108-575-00	MYLAR	0.0068MF	5%	50V
C141	1-130-620-00	FILM	0.01MF	5%	50V
C144	1-130-627-00	FILM	0.039MF	5%	50V
C146	1-130-630-00	FILM	0.068MF	5%	50V
C147	1-130-630-00	FILM	0.068MF	5%	50V
C150	1-123-353-00	ELECT	2.2MF	20%	50V
C150-1	1-161-318-00	CERAMIC	390PF	10%	50V
C151	1-123-369-00	ELECT	4.7MF	20%	50V
C203	1-123-354-00	ELECT	3.3MF	20%	50V
C204	1-102-106-00	CERAMIC	100PF	10%	50V
C205	1-123-354-00	ELECT	3.3MF	20%	50V
C206	1-102-106-00	CERAMIC	100PF	10%	50V
C207	1-123-380-00	ELECT	1MF	20%	50V
C208	1-161-271-00	CERAMIC	100PF	5%	50V
C209	1-123-356-00	ELECT	10MF	20%	50V
C210	1-161-326-00	CERAMIC	0.0022MF	30%	50V
C211	1-107-165-00	MICA	56PF	5%	500V
C212	1-161-321-00	CERAMIC	680PF	10%	50V
C213	1-107-036-00	MICA	68PF	5%	500V
C214	1-130-624-00	FILM	0.022MF	5%	50V
C216	1-123-354-00	ELECT	3.3MF	20%	50V
C217	1-108-571-00	MYLAR	0.0047MF	5%	50V
C218	1-161-316-00	CERAMIC	270PF	10%	50V
C219	1-124-185-00	ELECT	4.7MF	20%	50V
C222	1-130-620-00	FILM	0.01MF	5%	50V
C223	1-130-622-00	FILM	0.015MF	5%	50V
C224	1-130-620-00	FILM	0.01MF	5%	50V
C225	1-130-633-00	FILM	0.12MF	5%	50V
C226	1-123-380-00	ELECT	1MF	20%	50V
C227	1-130-633-00	FILM	0.12MF	5%	50V
C228	1-130-637-00	FILM	0.27MF	5%	50V
C229	1-130-635-00	FILM	0.18MF	5%	50V
C230	1-130-630-00	FILM	0.068MF	5%	50V
C231	1-123-380-00	ELECT	1MF	20%	50V

ELECTRICAL PARTS

Ref.No.	Part No.	Description			
C232	1-130-625-00	FILM	0.027MF	5%	50V
C233	1-130-635-00	FILM	0.18MF	5%	50V
C234	1-130-630-00	FILM	0.068MF	5%	50V
C235	1-123-369-00	ELECT	4.7MF	20%	50V
C236	1-123-351-00	ELECT	0.47MF	20%	50V
C237	1-123-369-00	ELECT	4.7MF	20%	50V
C238	1-123-317-00	ELECT	22MF	20%	16V
C239	1-124-186-00	ELECT	10MF	20%	50V
C240	1-108-575-00	MYLAR	0.0068MF	5%	50V
C241	1-130-620-00	FILM	0.01MF	5%	50V
C244	1-130-627-00	FILM	0.039MF	5%	50V
C246	1-130-630-00	FILM	0.068MF	5%	50V
C247	1-130-630-00	FILM	0.068MF	5%	50V
C250	1-123-353-00	ELECT	2.2MF	20%	50V
C250-1	1-161-318-00	CERAMIC	390PF	10%	50V
C251	1-123-369-00	ELECT	4.7MF	20%	50V
C301	1-123-308-00	ELECT	220MF	20%	10V
C302	1-123-308-00	ELECT	220MF	20%	10V
C303	1-123-356-00	ELECT	10MF	20%	50V
C304	1-123-369-00	ELECT	4.7MF	20%	50V
C305	1-123-317-00	ELECT	22MF	20%	16V
C306	1-129-708-00	FILM	0.0033MF	10%	630V
C307	1-123-369-00	ELECT	4.7MF	20%	50V
C308	1-130-287-00	FILM	0.0039MF	5%	100V
C309	1-130-293-00	FILM	0.0068MF	5%	100V
C310	1-130-293-00	FILM	0.0068MF	5%	100V
C311	1-123-351-00	ELECT	0.47MF	20%	50V
C312	1-161-330-00	CERAMIC	0.01MF	30%	25V
C313	1-123-356-00	ELECT	10MF	20%	50V
C314	1-123-295-00	ELECT	100MF	20%	6.3V
C315	1-123-307-00	ELECT	100MF	20%	10V
C316	1-123-305-00	ELECT	33MF	20%	10V
C317	1-123-356-00	ELECT	10MF	20%	50V
C318	1-123-309-00	ELECT	330MF	20%	10V
C319	1-123-307-00	ELECT	100MF	20%	10V
C320	1-123-337-00	ELECT	1000MF	20%	25V
C321	1-123-356-00	ELECT	10MF	20%	25V
C322	1-123-336-00	ELECT	470MF	20%	25V
C323	1-123-335-00	ELECT	330MF	20%	25V
C324 ⚠	1-161-744-00	(AEP,G-AEP,UK,E1,E2) ...CAP, CERAMIC			10000PF
C324 ⚠	1-161-749-00	(US,Canadian)...CAP, CERAMIC			10000PF
C325	1-161-330-00	CERAMIC	0.01MF	30%	25V
C326	1-123-369-00	ELECT	4.7MF	20%	50V
C336	1-102-106-00	CERAMIC	100PF	10%	50V

NOTE:
- Items with no part number and no description are not stocked because they are seldom required for routine service.
- Items marked " ♦ " are not stocked since they are seldom required for routine service. Some delay should be anticipated when ordering these items.
- Due to standardization, parts with part numbers (Δ-ΔΔΔ-ΔΔΔ-XX or Δ-ΔΔΔΔ-ΔΔΔ-X) may be different from those used in the set.

CAPACITORS:
MF:μF, PF:μμF.

RESISTORS
- All resistors are in ohms.
- F : nonflammable

COILS
- MMH : mH, UH : μH

SEMICONDUCTORS
In each case, U : μ, for example:
UA···: μA···, UPA···: μPA···, UPC···: μPC, UPD···: μPD···

The components identified by shading and mark ⚠ are critical for safety. Replace only with part number specified.

Les composants identifiés par une trame et une marque ⚠ sont critiques pour la sécurité. Ne les remplacer que par une pièce portant le numéro spécifié.

ELECTRICAL PARTS

Ref.No.	Part No.	Description			
C129	1-130-635-00	FILM	0.18MF	5%	50V
C130	1-130-630-00	FILM	0.068MF	5%	50V
C131	1-123-380-00	ELECT	1MF	20%	50V
C132	1-130-625-00	FILM	0.027MF	5%	50V
C133	1-130-635-00	FILM	0.18MF	5%	50V
C134	1-130-630-00	FILM	0.068MF	5%	50V
C135	1-123-369-00	ELECT	4.7MF	20%	50V
C136	1-123-351-00	ELECT	0.47MF	20%	50V
C137	1-123-369-00	ELECT	4.7MF	20%	50V
C138	1-123-317-00	ELECT	22MF	20%	16V
C139	1-124-186-00	ELECT	10MF	20%	50V
C140	1-108-575-00	MYLAR	0.0068MF	5%	50V
C141	1-130-620-00	FILM	0.01MF	5%	50V
C144	1-130-627-00	FILM	0.039MF	5%	50V
C146	1-130-630-00	FILM	0.068MF	5%	50V
C147	1-130-630-00	FILM	0.068MF	5%	50V
C150	1-123-353-00	ELECT	2.2MF	20%	50V
C150-1	1-161-318-00	CERAMIC	390PF	10%	50V
C151	1-123-369-00	ELECT	4.7MF	20%	50V
C203	1-123-354-00	ELECT	3.3MF	20%	50V
C204	1-102-106-00	CERAMIC	100PF	10%	50V
C205	1-123-354-00	ELECT	3.3MF	20%	50V
C206	1-102-106-00	CERAMIC	100PF	10%	50V
C207	1-123-380-00	ELECT	1MF	20%	50V
C208	1-161-271-00	CERAMIC	100PF	5%	50V
C209	1-123-356-00	ELECT	10MF	20%	50V
C210	1-161-326-00	CERAMIC	0.0022MF	30%	50V
C211	1-107-165-00	MICA	56PF	5%	500V
C212	1-161-321-00	CERAMIC	680PF	10%	50V
C213	1-107-036-00	MICA	68PF	5%	500V
C214	1-130-624-00	FILM	0.022MF	5%	50V
C216	1-123-354-00	ELECT	3.3MF	20%	50V
C217	1-108-571-00	MYLAR	0.0047MF	5%	50V
C218	1-161-316-00	CERAMIC	270PF	10%	50V
C219	1-124-185-00	ELECT	4.7MF	20%	50V
C222	1-130-620-00	FILM	0.01MF	5%	50V
C223	1-130-622-00	FILM	0.015MF	5%	50V
C224	1-130-620-00	FILM	0.01MF	5%	50V
C225	1-130-633-00	FILM	0.12MF	5%	50V
C226	1-123-380-00	ELECT	1MF	20%	50V
C227	1-130-633-00	FILM	0.12MF	5%	50V
C228	1-130-637-00	FILM	0.27MF	5%	50V
C229	1-130-635-00	FILM	0.18MF	5%	50V
C230	1-130-630-00	FILM	0.068MF	5%	50V
C231	1-123-380-00	ELECT	1MF	20%	50V

ELECTRICAL PARTS

Ref.No.	Part No.	Description			
C232	1-130-625-00	FILM	0.027MF	5%	50V
C233	1-130-635-00	FILM	0.18MF	5%	50V
C234	1-130-630-00	FILM	0.068MF	5%	50V
C235	1-123-369-00	ELECT	4.7MF	20%	50V
C236	1-123-351-00	ELECT	0.47MF	20%	50V
C237	1-123-369-00	ELECT	4.7MF	20%	50V
C238	1-123-317-00	ELECT	22MF	20%	16V
C239	1-124-186-00	ELECT	10MF	20%	50V
C240	1-108-575-00	MYLAR	0.0068MF	5%	50V
C241	1-130-620-00	FILM	0.01MF	5%	50V
C244	1-130-627-00	FILM	0.039MF	5%	50V
C246	1-130-630-00	FILM	0.068MF	5%	50V
C247	1-130-630-00	FILM	0.068MF	5%	50V
C250	1-123-353-00	ELECT	2.2MF	20%	50V
C250-1	1-161-318-00	CERAMIC	390PF	10%	50V
C251	1-123-369-00	ELECT	4.7MF	20%	50V
C301	1-123-308-00	ELECT	220MF	20%	10V
C302	1-123-308-00	ELECT	220MF	20%	10V
C303	1-123-356-00	ELECT	10MF	20%	50V
C304	1-123-369-00	ELECT	4.7MF	20%	50V
C305	1-123-317-00	ELECT	22MF	20%	16V
C306	1-129-708-00	FILM	0.0033MF	10%	630V
C307	1-123-369-00	ELECT	4.7MF	20%	50V
C308	1-130-287-00	FILM	0.0039MF	5%	100V
C309	1-130-293-00	FILM	0.0068MF	5%	100V
C310	1-130-293-00	FILM	0.0068MF	5%	100V
C311	1-123-351-00	ELECT	0.47MF	20%	50V
C312	1-161-330-00	CERAMIC	0.01MF	30%	25V
C313	1-123-356-00	ELECT	10MF	20%	50V
C314	1-123-295-00	ELECT	100MF	20%	6.3V
C315	1-123-307-00	ELECT	100MF	20%	10V
C316	1-123-305-00	ELECT	33MF	20%	10V
C317	1-123-356-00	ELECT	10MF	20%	50V
C318	1-123-309-00	ELECT	330MF	20%	10V
C319	1-123-307-00	ELECT	100MF	20%	10V
C320	1-123-337-00	ELECT	1000MF	20%	25V
C321	1-123-356-00	ELECT	10MF	20%	25V
C322	1-123-336-00	ELECT	470MF	20%	25V
C323	1-123-335-00	ELECT	330MF	20%	25V
C324 ⚠	1-161-744-00	(AEP,G-AEP,UK,E1,E2) ...CAP, CERAMIC			10000PF
C324 ⚠	1-161-749-00	(US,Canadian) ...CAP, CERAMIC			10000PF
C325	1-161-330-00	CERAMIC	0.01MF	30%	25V
C326	1-123-369-00	ELECT	4.7MF	20%	50V
C336	1-102-106-00	CERAMIC	100PF	10%	50V

NOTE:
- Items with no part number and no description are not stocked because they are seldom required for routine service.
- Items marked " ♦ " are not stocked since they are seldom required for routine service. Some delay should be anticipated when ordering these items.
- Due to standardization, parts with part numbers (Δ-ΔΔΔ-ΔΔΔ-XX or Δ-ΔΔΔΔ-ΔΔΔ-X) may be different from those used in the set.

CAPACITORS:
MF:μF, PF:μμF.

RESISTORS
- All resistors are in ohms.
- F : nonflammable

COILS
- MMH : mH, UH : μH

SEMICONDUCTORS
In each case, U : μ, for example:
UA···: μA···, UPA···: μPA···, UPC···: μPC,
UPD···: μPD···

The components identified by shading and mark ⚠ are critical for safety. Replace only with part number specified.

Les composants identifiés par une trame et une marque ⚠ sont critiques pour la sécurité. Ne les remplacer que par une pièce portant le numéro spécifié.

ELECTRICAL PARTS

Ref.No.	Part No.	Description			
C337	1-102-106-00	CERAMIC	100PF	10%	50V
C338	1-102-106-00	CERAMIC	100PF	10%	50V
C340	1-161-271-00	CERAMIC	100PF	5%	50V
C341	1-123-333-00	ELECT	100MF	20%	25V
C502	1-108-571-00	MYLAR	0.0047MF	5%	50V
C503	1-123-380-00	ELECT	1MF	20%	50V
C504	1-123-380-00	ELECT	1MF	20%	50V
C505	1-161-330-00	CERAMIC	0.01MF	30%	25V
C506	1-161-330-00	CERAMIC	0.01MF	30%	25V
C507	1-161-330-00	CERAMIC	0.01MF	30%	25V
C508	1-161-330-00	CERAMIC	0.01MF	30%	25V
C509	1-161-330-00	CERAMIC	0.01MF	30%	25V
C510	1-161-330-00	CERAMIC	0.01MF	30%	25V
C511	1-161-330-00	CERAMIC	0.01MF	30%	25V
C512	1-161-330-00	CERAMIC	0.01MF	30%	25V
C513	1-161-330-00	CERAMIC	0.01MF	30%	25V
C514	1-123-380-00	ELECT	1MF	20%	50V
C515	1-161-323-00	CERAMIC	0.001MF	10%	50V
C516	1-161-323-00	CERAMIC	0.001MF	10%	50V
C517	1-123-607-00	ELECT	0.1MF	20%	50V
C518	1-130-620-00	FILM	0.01MF	5%	50V
C519	1-130-621-00	FILM	0.012MF	5%	50V
C520	1-130-621-00	FILM	0.012MF	5%	50V
C521	1-130-620-00	FILM	0.01MF	5%	50V
C523	1-130-629-00	FILM	0.056MF	5%	50V
C524	1-130-629-00	FILM	0.056MF	5%	50V
C525	1-123-306-00	ELECT	47MF	20%	10V
C526	1-123-369-00	ELECT	4.7MF	20%	50V
C532	1-123-356-00	ELECT	10MF	20%	25V
C533	1-130-628-00	FILM	0.047MF	5%	50V
C534	1-130-628-00	FILM	0.047MF	5%	50V
♦ CNP301	1-560-064-00	PIN, CONNECTOR 6P			
♦ CNP302	1-560-060-00	PIN, CONNECTOR 2P			
♦ CNP303	1-560-064-00	PIN, CONNECTOR 6P			
♦ CNP304	1-560-063-00	PIN, CONNECTOR 5P			
CNP305	1-561-965-00	SOCKET 5P (REMOTE)			
♦ CNP501	1-560-062-00	PIN, CONNECTOR 4P			
♦ CNP502	1-560-062-31	PIN, CONNECTOR 4P			
♦ CNP503	1-560-063-21	PIN, CONNECTOR 5P			
♦ CNP504	1-560-065-00	PIN, CONNECTOR 8P			
♦ CNP507	1-560-062-41	PIN, CONNECTOR 4P			
CT101	1-141-225-21	CAP, TUNING, TRIMMER			
CT201	1-141-225-21	CAP, TUNING, TRIMMER			
D301	8-719-909-20	DIODE GL-9NG2			
D302	8-719-909-20	DIODE GL-9NG2			
D303	8-719-909-20	DIODE GL-9NG2			

ELECTRICAL PARTS

Ref.No.	Part No.	Description
D304	8-719-909-20	DIODE GL-9NG2
D305	8-719-901-33	DIODE 1SS133
D306	8-719-901-33	DIODE 1SS133
D307	8-719-901-33	DIODE 1SS133
D308	8-719-901-33	DIODE 1SS133
D309	8-719-910-92	DIODE HZ9A2L
D310	8-719-901-33	DIODE 1SS133
D311	8-719-992-41	DIODE HZ4B1
D312	8-719-200-02	DIODE 10E-2
D313	8-719-200-02	DIODE 10E-2
D314	8-719-200-02	DIODE 10E-2
D315	8-719-901-33	DIODE 1SS133
D316	8-719-200-02	DIODE 10E-2
D317	8-719-200-02	DIODE 10E-2
D318	8-719-200-02	DIODE 10E-2
D319	8-719-200-02	DIODE 10E-2
D501	8-719-901-33	DIODE 1SS133
D502	8-719-901-33	DIODE 1SS133
D506	8-719-901-33	DIODE 1SS133
D507	8-719-901-33	DIODE 1SS133
D508	8-719-901-33	DIODE 1SS133
D509	8-719-901-33	DIODE 1SS133
D510	8-719-901-33	DIODE 1SS133
D511	8-719-901-33	DIODE 1SS133
D513	8-719-901-33	DIODE 1SS133
D515	8-719-901-33	DIODE 1SS133
D516	8-719-901-33	DIODE 1SS133
D517	8-719-901-33	DIODE 1SS133
D518	8-719-901-33	DIODE 1SS133
D519	8-719-901-33	DIODE 1SS133
D525	8-719-934-05	DIODE SLR-34URC5
D526	8-719-902-77	DIODE SLR-34PC5
D527	8-719-902-77	DIODE SLR-34PC5
D529	8-719-902-78	DIODE SLR-34DC5
D534	8-719-901-33	DIODE 1SS133
D537	8-719-901-33	DIODE 1SS133
HE101	8-725-724-00	HEAD, ERASE EF-201-36
HRP101	8-725-507-50	HEAD, REC/PB (PP227-3602C)
FLT301	1-519-292-00	INDICATOR TUBE, FLUORESCENT
IC101	8-752-002-70	IC CX20027
IC102	8-759-906-02	IC BA6146
IC201	8-752-002-80	IC CX20028
IC202	8-759-906-02	IC BA6146
IC301	8-759-101-56	IC CX10033A
IC302	8-759-101-55	IC CX10032A

NOTE:
- Items with no part number and no description are not stocked because they are seldom required for routine service.
- Items marked " ♦ " are not stocked since they are seldom required for routine service. Some delay should be anticipated when ordering these items.
- Due to standardization, parts with part numbers (Δ-ΔΔΔ-ΔΔΔ-XX or Δ-ΔΔΔΔ-ΔΔΔ-X) may be different from those used in the set.

CAPACITORS:
MF:μF, PF:μμF.

RESISTORS
- All resistors are in ohms.
- F : nonflammable

COILS
- MMH : mH, UH : μH

SEMICONDUCTORS
In each case, U : μ, for example:
UA···: μA···, UPA···: μPA···, UPC···: μPC,
UPD···: μPD···

ELECTRICAL PARTS

Ref.No.	Part No.	Description
IC303	8-759-700-47	IC CX10035
IC304	8-759-600-02	IC M5218L
IC501	8-759-201-44	IC TC9310N-015
IC502	8-759-700-46	IC CX10034
IC503	8-759-201-84	IC TC9305P-003
IC504	8-759-201-84	IC TC9305P-003
J101	1-507-762-00	JACK, PIN 4P (LINE IN L)
J102	1-507-762-00	JACK, PIN 4P (LINE OUT L)
J103	1-507-797-21	JACK, LARGE TYPE (MIC L)
J201	1-507-762-00	JACK, PIN 4P (LINE IN R)
J202	1-507-762-00	JACK, PIN 4P (LINE OUT R)
J203	1-507-797-21	JACK, LARGE TYPE (MIC R)
J301	1-507-796-21	JACK, (HEADPHONES)
L101	1-408-930-00	MICRO INDUCTOR 33MMH
L102	1-408-252-00	MICRO INDUCTOR 3.9MMH
L201	1-408-930-00	MICRO INDUCTOR 33MMH
L202	1-408-252-00	MICRO INDUCTOR 3.9MMH
L301	1-407-177-XX	MICRO INDUCTOR 470UH
LPF101	1-231-388-31	FILTER, LOW PASS
LPL201	1-231-388-31	FILTER, LOW PASS
PHI501	8-719-902-90	PHOTO INTERRUPTOR SPI201-20
PT1 ⚠	1-447-603-00	(US,Canadian)....TRANSFORMER, POWER
PT1 ⚠	1-447-604-00	(AEP,G-AEP,UK)...TRANSFORMER, POWER
PT1 ⚠	1-447-605-00	(E1,E2).....TRANSFORMER, POWER
Q101	8-729-194-57	TRANSISTOR 2SC945-P
Q103	8-729-194-57	TRANSISTOR 2SC945-P
Q104	8-729-100-13	TRANSISTOR 2SC2001
Q106	8-729-194-57	TRANSISTOR 2SC945-P
Q107	8-729-194-57	TRANSISTOR 2SC945-P
Q108	8-729-194-57	TRANSISTOR 2SC945-P
Q109	8-729-194-57	TRANSISTOR 2SC945-P
Q110	8-729-194-57	TRANSISTOR 2SC945-P
Q111	8-729-194-57	TRANSISTOR 2SC945-P
Q201	8-729-194-57	TRANSISTOR 2SC945-P
Q203	8-729-194-57	TRANSISTOR 2SC945-P
Q204	8-729-100-13	TRANSISTOR 2SC2001
Q206	8-729-194-57	TRANSISTOR 2SC945-P
Q207	8-729-194-57	TRANSISTOR 2SC945-P
Q208	8-729-194-57	TRANSISTOR 2SC945-P
Q209	8-729-194-57	TRANSISTOR 2SC945-P
Q210	8-729-194-57	TRANSISTOR 2SC945-P
Q211	8-729-194-57	TRANSISTOR 2SC945-P
Q301	8-729-612-77	TRANSISTOR 2SA1027R
Q302	8-729-194-57	TRANSISTOR 2SC945-P
Q303	8-729-194-57	TRANSISTOR 2SC945-P

ELECTRICAL PARTS

Ref.No.	Part No.	Description
Q304	8-729-194-57	TRANSISTOR 2SC945-P
Q305	8-729-117-54	TRANSISTOR 2SA1175
Q306	8-729-194-57	TRANSISTOR 2SC945-P
Q307	8-729-194-57	TRANSISTOR 2SC945-P
Q308	8-729-180-92	TRANSISTOR 2SD809-K
Q309	8-729-180-92	TRANSISTOR 2SD809-K
Q310	8-729-180-92	TRANSISTOR 2SD809-K
Q311	8-729-173-13	TRANSISTOR 2SB731-K
Q313	8-729-194-57	TRANSISTOR 2SC945-P
Q314	8-729-194-57	TRANSISTOR 2SC945-P
Q315	8-729-194-57	TRANSISTOR 2SC945-P
Q316	8-729-612-77	TRANSISTOR 2SA1027R
Q501	8-729-194-57	TRANSISTOR 2SC945-P
Q503	8-729-194-57	TRANSISTOR 2SC945-P
Q506	8-729-117-54	TRANSISTOR 2SA1175
Q508	8-729-117-54	TRANSISTOR 2SA1175
Q510	8-729-194-57	TRANSISTOR 2SC945-P
Q515	8-729-194-57	TRANSISTOR 2SC945-P
Q516	8-729-194-57	TRANSISTOR 2SC945-P
R101	1-246-481-00	CARBON 2.2K 5% 1/4W
R102	1-246-509-00	CARBON 33K 5% 1/4W
R103	1-247-879-00	CARBON 100K 5% 1/6W
R104	1-247-855-00	CARBON 10K 5% 1/6W
R105	1-247-855-00	CARBON 10K 5% 1/6W
R106	1-247-819-00	CARBON 330 5% 1/6W
R107	1-247-866-00	CARBON 30K 5% 1/6W
R108	1-246-521-00	CARBON 100K 5% 1/4W
R109	1-246-505-00	CARBON 22K 5% 1/4W
R110	1-246-491-00	CARBON 5.6K 5% 1/4W
R111	1-246-485-00	CARBON 3.3K 5% 1/4W
R112	1-246-521-00	CARBON 100K 5% 1/4W
R113	1-246-493-00	CARBON 6.8K 5% 1/4W
R114	1-246-529-00	CARBON 220K 5% 1/4W
R115	1-246-449-00	CARBON 100 5% 1/4W
R116	1-246-524-00	CARBON 130K 5% 1/4W
R117	1-246-491-00	CARBON 5.6K 5% 1/4W
R118	1-246-449-00	CARBON 100 5% 1/4W
R120	1-246-499-00	CARBON 12K 5% 1/4W
R121	1-246-503-00	CARBON 18K 5% 1/4W
R122	1-246-529-00	CARBON 220K 5% 1/4W
R123	1-247-831-00	CARBON 1K 5% 1/6W
R124	1-247-831-00	CARBON 1K 5% 1/6W
R125	1-246-473-00	CARBON 1K 5% 1/4W
R126	1-246-481-00	CARBON 2.2K 5% 1/4W
R127	1-246-472-00	CARBON 910 5% 1/4W
R128	1-246-484-00	CARBON 3K 5% 1/4W

ELECTRICAL PARTS

Ref.No.	Part No.	Description
R129	1-246-490-00	CARBON 5.1K 5% 1/4W
R130	1-246-507-00	CARBON 27K 5% 1/4W
R131	1-246-466-00	CARBON 510 5% 1/4W
R132	1-246-537-00	CARBON 470K 5% 1/4W
R133	1-214-776-00	METAL 91K 1% 1/4W
R134	1-246-513-00	CARBON 47K 5% 1/4W
R135	1-246-480-00	CARBON 2K 5% 1/4W
R136	1-246-490-00	CARBON 5.1K 5% 1/4W
R137	1-247-820-00	CARBON 360 5% 1/6W
R138	1-247-845-00	CARBON 3.9K 5% 1/6W
R139	1-247-833-00	CARBON 1.2K 5% 1/6W
R140	1-246-505-00	CARBON 22K 5% 1/4W
R143	1-246-474-00	CARBON 1.1K 5% 1/4W
R144	1-247-887-00	CARBON 220K 5% 1/6W
R145	1-247-886-00	CARBON 200K 5% 1/6W
R146	1-247-845-00	CARBON 3.9K 5% 1/6W
R147	1-247-887-00	CARBON 220K 5% 1/6W
R148	1-247-886-00	CARBON 200K 5% 1/6W
R149	1-246-497-00	CARBON 10K 5% 1/4W
R150	1-246-497-00	CARBON 10K 5% 1/4W
R151	1-246-489-00	CARBON 4.7K 5% 1/4W
R152	1-246-475-00	CARBON 1.2K 5% 1/4W
R153	1-246-497-00	CARBON 10K 5% 1/4W
R154	1-247-831-00	CARBON 1K 5% 1/6W
R155	1-246-521-00	CARBON 100K 5% 1/4W
R161	1-246-507-00	CARBON 27K 5% 1/4W
R163	1-247-805-00	CARBON 82 5% 1/6W
R164	1-247-839-00	CARBON 2.2K 5% 1/6W
R166	1-247-863-00	CARBON 22K 5% 1/6W
R167	1-247-857-00	CARBON 12K 5% 1/6W
R169	1-247-852-00	CARBON 7.5K 5% 1/6W
R170	1-247-847-00	CARBON 4.7K 5% 1/6W
R171	1-247-863-00	CARBON 22K 5% 1/6W
R173	1-247-834-00	CARBON 1.3K 5% 1/6W
R174	1-247-863-00	CARBON 22K 5% 1/6W
R175	1-247-851-00	CARBON 6.8K 5% 1/6W
R176	1-247-839-00	CARBON 2.2K 5% 1/6W
R179	1-247-863-00	CARBON 22K 5% 1/6W
R180	1-247-855-00	CARBON 10K 5% 1/6W
R181	1-247-855-00	CARBON 10K 5% 1/6W
R182	1-247-843-00	CARBON 3.3K 5% 1/6W
R183	1-247-855-00	CARBON 10K 5% 1/6W
R184	1-247-879-00	CARBON 100K 5% 1/6W
R185	1-247-823-00	CARBON 470 5% 1/6W
R188	1-247-888-00	CARBON 240K 5% 1/6W

ELECTRICAL PARTS

Ref.No.	Part No.	Description
R189	1-247-855-00	CARBON 10K 5% 1/6W
R191	1-247-865-00	CARBON 27K 5% 1/6W
R192	1-247-807-00	CARBON 100 5% 1/6W
R201	1-246-481-00	CARBON 2.2K 5% 1/4W
R202	1-246-509-00	CARBON 33K 5% 1/4W
R203	1-247-879-00	CARBON 100K 5% 1/6W
R204	1-247-855-00	CARBON 10K 5% 1/6W
R205	1-247-855-00	CARBON 10K 5% 1/6W
R206	1-247-819-00	CARBON 330 5% 1/6W
R207	1-247-866-00	CARBON 30K 5% 1/6W
R208	1-246-521-00	CARBON 100K 5% 1/4W
R209	1-246-505-00	CARBON 22K 5% 1/4W
R210	1-246-491-00	CARBON 5.6K 5% 1/4W
R211	1-246-485-00	CARBON 3.3K 5% 1/4W
R212	1-246-521-00	CARBON 100K 5% 1/4W
R213	1-246-493-00	CARBON 6.8K 5% 1/4W
R214	1-246-529-00	CARBON 220K 5% 1/4W
R215	1-246-449-00	CARBON 100 5% 1/4W
R216	1-246-524-00	CARBON 130K 5% 1/4W
R217	1-246-491-00	CARBON 5.6K 5% 1/4W
R218	1-246-449-00	CARBON 100 5% 1/4W
R220	1-246-499-00	CARBON 12K 5% 1/4W
R221	1-246-503-00	CARBON 18K 5% 1/4W
R222	1-246-529-00	CARBON 220K 5% 1/4W
R223	1-247-831-00	CARBON 1K 5% 1/6W
R224	1-247-831-00	CARBON 1K 5% 1/6W
R225	1-246-473-00	CARBON 1K 5% 1/4W
R226	1-246-481-00	CARBON 2.2K 5% 1/4W
R227	1-246-472-00	CARBON 910 5% 1/4W
R228	1-246-484-00	CARBON 3K 5% 1/4W
R229	1-246-490-00	CARBON 5.1K 5% 1/4W
R230	1-246-507-00	CARBON 27K 5% 1/4W
R231	1-246-466-00	CARBON 510 5% 1/4W
R232	1-246-537-00	CARBON 470K 5% 1/4W
R233	1-214-776-00	METAL 91K 1% 1/4W
R234	1-246-513-00	CARBON 47K 5% 1/4W
R235	1-246-480-00	CARBON 2K 5% 1/4W
R236	1-246-490-00	CARBON 5.1K 5% 1/4W
R237	1-247-820-00	CARBON 360 5% 1/6W
R238	1-247-845-00	CARBON 3.9K 5% 1/6W
R239	1-247-833-00	CARBON 1.2K 5% 1/6W
R240	1-246-505-00	CARBON 22K 5% 1/4W
R243	1-246-474-00	CARBON 1.1K 5% 1/4W
R244	1-247-887-00	CARBON 220K 5% 1/6W
R245	1-247-886-00	CARBON 200K 5% 1/6W

NOTE:
- Items with no part number and no description are not stocked because they are seldom required for routine service.
- Items marked " ♦ " are not stocked since they are seldom required for routine service. Some delay should be anticipated when ordering these items.
- Due to standardization, parts with part numbers (Δ-ΔΔΔ-ΔΔΔ-XX or Δ-ΔΔΔΔ-ΔΔΔ-X) may be different from those used in the set.

CAPACITORS:
MF:μF, PF:μμF.

RESISTORS
- All resistors are in ohms.
- F : nonflammable

COILS
- MMH : mH, UH : μH

SEMICONDUCTORS
In each case, U : μ, for example:
UA···: μA···, UPA···: μPA···, UPC···: μPC, UPD···: μPD···

The components identified by shading and mark ⚠ are critical for safety. Replace only with part number specified.

Les composants identifiés par une trame et une marque ⚠ sont critiques pour la sécurité. Ne les remplacer que par une pièce portant le numéro spécifié.

NOTE:
- Items with no part number and no description are not stocked because they are seldom required for routine service.
- Items marked " ♦ " are not stocked since they are seldom required for routine service. Some delay should be anticipated when ordering these items.
- Due to standardization, parts with part numbers (Δ-ΔΔΔ-ΔΔΔ-XX or Δ-ΔΔΔΔ-ΔΔΔ-X) may be different from those used in the set.

CAPACITORS:
MF:μF, PF:μμF.

RESISTORS
- All resistors are in ohms.
- F : nonflammable

COILS
- MMH : mH, UH : μH

SEMICONDUCTORS
In each case, U : μ, for example:
UA···: μA···, UPA···: μPA···, UPC···: μPC, UPD···: μPD···

ELECTRICAL PARTS

Ref.No.	Part No.	Description			
R129	1-246-490-00	CARBON	5.1K	5%	1/4W
R130	1-246-507-00	CARBON	27K	5%	1/4W
R131	1-246-466-00	CARBON	510	5%	1/4W
R132	1-246-537-00	CARBON	470K	5%	1/4W
R133	1-214-776-00	METAL	91K	1%	1/4W
R134	1-246-513-00	CARBON	47K	5%	1/4W
R135	1-246-480-00	CARBON	2K	5%	1/4W
R136	1-246-490-00	CARBON	5.1K	5%	1/4W
R137	1-247-820-00	CARBON	360	5%	1/6W
R138	1-247-845-00	CARBON	3.9K	5%	1/6W
R139	1-247-833-00	CARBON	1.2K	5%	1/6W
R140	1-246-505-00	CARBON	22K	5%	1/4W
R143	1-246-474-00	CARBON	1.1K	5%	1/4W
R144	1-247-887-00	CARBON	220K	5%	1/6W
R145	1-247-886-00	CARBON	200K	5%	1/6W
R146	1-247-845-00	CARBON	3.9K	5%	1/6W
R147	1-247-887-00	CARBON	220K	5%	1/6W
R148	1-247-886-00	CARBON	200K	5%	1/6W
R149	1-246-497-00	CARBON	10K	5%	1/4W
R150	1-246-497-00	CARBON	10K	5%	1/4W
R151	1-246-489-00	CARBON	4.7K	5%	1/4W
R152	1-246-475-00	CARBON	1.2K	5%	1/4W
R153	1-246-497-00	CARBON	10K	5%	1/4W
R154	1-247-831-00	CARBON	1K	5%	1/6W
R155	1-246-521-00	CARBON	100K	5%	1/4W
R161	1-246-507-00	CARBON	27K	5%	1/4W
R163	1-247-805-00	CARBON	82	5%	1/6W
R164	1-247-839-00	CARBON	2.2K	5%	1/6W
R166	1-247-863-00	CARBON	22K	5%	1/6W
R167	1-247-857-00	CARBON	12K	5%	1/6W
R169	1-247-852-00	CARBON	7.5K	5%	1/6W
R170	1-247-847-00	CARBON	4.7K	5%	1/6W
R171	1-247-863-00	CARBON	22K	5%	1/6W
R173	1-247-834-00	CARBON	1.3K	5%	1/6W
R174	1-247-863-00	CARBON	22K	5%	1/6W
R175	1-247-851-00	CARBON	6.8K	5%	1/6W
R176	1-247-839-00	CARBON	2.2K	5%	1/6W
R179	1-247-863-00	CARBON	22K	5%	1/6W
R180	1-247-855-00	CARBON	10K	5%	1/6W
R181	1-247-855-00	CARBON	10K	5%	1/6W
R182	1-247-843-00	CARBON	3.3K	5%	1/6W
R183	1-247-855-00	CARBON	10K	5%	1/6W
R184	1-247-879-00	CARBON	100K	5%	1/6W
R185	1-247-823-00	CARBON	470	5%	1/6W
R188	1-247-888-00	CARBON	240K	5%	1/6W

ELECTRICAL PARTS

Ref.No.	Part No.	Description			
R189	1-247-855-00	CARBON	10K	5%	1/6W
R191	1-247-865-00	CARBON	27K	5%	1/6W
R192	1-247-807-00	CARBON	100	5%	1/6W
R201	1-246-481-00	CARBON	2.2K	5%	1/4W
R202	1-246-509-00	CARBON	33K	5%	1/4W
R203	1-247-879-00	CARBON	100K	5%	1/6W
R204	1-247-855-00	CARBON	10K	5%	1/6W
R205	1-247-855-00	CARBON	10K	5%	1/6W
R206	1-247-819-00	CARBON	330	5%	1/6W
R207	1-247-866-00	CARBON	30K	5%	1/6W
R208	1-246-521-00	CARBON	100K	5%	1/4W
R209	1-246-505-00	CARBON	22K	5%	1/4W
R210	1-246-491-00	CARBON	5.6K	5%	1/4W
R211	1-246-485-00	CARBON	3.3K	5%	1/4W
R212	1-246-521-00	CARBON	100K	5%	1/4W
R213	1-246-493-00	CARBON	6.8K	5%	1/4W
R214	1-246-529-00	CARBON	220K	5%	1/4W
R215	1-246-449-00	CARBON	100	5%	1/4W
R216	1-246-524-00	CARBON	130K	5%	1/4W
R217	1-246-491-00	CARBON	5.6K	5%	1/4W
R218	1-246-449-00	CARBON	100	5%	1/4W
R220	1-246-499-00	CARBON	12K	5%	1/4W
R221	1-246-503-00	CARBON	18K	5%	1/4W
R222	1-246-529-00	CARBON	220K	5%	1/4W
R223	1-247-831-00	CARBON	1K	5%	1/6W
R224	1-247-831-00	CARBON	1K	5%	1/6W
R225	1-246-473-00	CARBON	1K	5%	1/4W
R226	1-246-481-00	CARBON	2.2K	5%	1/4W
R227	1-246-472-00	CARBON	910	5%	1/4W
R228	1-246-484-00	CARBON	3K	5%	1/4W
R229	1-246-490-00	CARBON	5.1K	5%	1/4W
R230	1-246-507-00	CARBON	27K	5%	1/4W
R231	1-246-466-00	CARBON	510	5%	1/4W
R232	1-246-537-00	CARBON	470K	5%	1/4W
R233	1-214-776-00	METAL	91K	1%	1/4W
R234	1-246-513-00	CARBON	47K	5%	1/4W
R235	1-246-480-00	CARBON	2K	5%	1/4W
R236	1-246-490-00	CARBON	5.1K	5%	1/4W
R237	1-247-820-00	CARBON	360	5%	1/6W
R238	1-247-845-00	CARBON	3.9K	5%	1/6W
R239	1-247-833-00	CARBON	1.2K	5%	1/6W
R240	1-246-505-00	CARBON	22K	5%	1/4W
R243	1-246-474-00	CARBON	1.1K	5%	1/4W
R244	1-247-887-00	CARBON	220K	5%	1/6W
R245	1-247-886-00	CARBON	200K	5%	1/6W

ELECTRICAL PARTS

Ref.No.	Part No.	Description			
R246	1-247-845-00	CARBON	3.9K	5%	1/6W
R247	1-247-887-00	CARBON	220K	5%	1/6W
R248	1-247-886-00	CARBON	200K	5%	1/6W
R249	1-246-497-00	CARBON	10K	5%	1/4W
R250	1-246-497-00	CARBON	10K	5%	1/4W
R251	1-246-489-00	CARBON	4.7K	5%	1/4W
R252	1-246-475-00	CARBON	1.2K	5%	1/4W
R253	1-246-497-00	CARBON	10K	5%	1/4W
R254	1-247-831-00	CARBON	1K	5%	1/6W
R255	1-246-521-00	CARBON	100K	5%	1/4W
R261	1-246-507-00	CARBON	27K	5%	1/4W
R263	1-247-805-00	CARBON	82	5%	1/6W
R264	1-247-839-00	CARBON	2.2K	5%	1/6W
R266	1-247-863-00	CARBON	22K	5%	1/6W
R267	1-247-857-00	CARBON	12K	5%	1/6W
R269	1-247-852-00	CARBON	7.5K	5%	1/6W
R270	1-247-847-00	CARBON	4.7K	5%	1/6W
R271	1-247-863-00	CARBON	22K	5%	1/6W
R273	1-247-834-00	CARBON	1.3K	5%	1/6W
R274	1-247-863-00	CARBON	22K	5%	1/6W
R275	1-247-851-00	CARBON	6.8K	5%	1/6W
R276	1-247-839-00	CARBON	2.2K	5%	1/6W
R279	1-247-863-00	CARBON	22K	5%	1/6W
R280	1-247-855-00	CARBON	10K	5%	1/6W
R281	1-247-855-00	CARBON	10K	5%	1/6W
R282	1-247-843-00	CARBON	3.3K	5%	1/6W
R283	1-247-855-00	CARBON	10K	5%	1/6W
R284	1-247-879-00	CARBON	100K	5%	1/6W
R285	1-247-823-00	CARBON	470	5%	1/6W
R288	1-247-888-00	CARBON	240K	5%	1/6W
R289	1-247-855-00	CARBON	10K	5%	1/6W
R291	1-247-865-00	CARBON	27K	5%	1/6W
R292	1-247-807-00	CARBON	100	5%	1/6W
R301	1-246-461-00	CARBON	330	5%	1/4W
R302	1-247-887-00	CARBON	220K	5%	1/6W
R303	1-247-855-00	CARBON	10K	5%	1/6W
R304	1-246-457-00	CARBON	220	5%	1/4W
R305	1-246-457-00	CARBON	220	5%	1/4W
R306	1-247-847-00	CARBON	4.7K	5%	1/6W
R307	1-247-831-00	CARBON	1K	5%	1/6W
R308	1-247-879-00	CARBON	100K	5%	1/6W
R309	1-247-871-00	CARBON	47K	5%	1/6W
R310	1-247-879-00	CARBON	100K	5%	1/6W
R311	1-247-847-00	CARBON	4.7K	5%	1/6W
R312	1-247-863-00	CARBON	22K	5%	1/6W

ELECTRICAL PARTS

Ref.No.	Part No.	Description			
R313	1-247-863-00	CARBON	22K	5%	1/6W
R314 ⚠	1-217-529-00	FUSIBLE	33	5%	1/4W
R315	1-247-857-00	CARBON	12K	5%	1/6W
R316	1-247-857-00	CARBON	12K	5%	1/6W
R317	1-247-855-00	CARBON	10K	5%	1/6W
R318	1-247-871-00	CARBON	47K	5%	1/6W
R319	1-247-871-00	CARBON	47K	5%	1/6W
R320	1-247-852-00	CARBON	7.5K	5%	1/6W
R321	1-247-844-00	CARBON	3.6K	5%	1/6W
R322	1-247-848-00	CARBON	5.1K	5%	1/6W
R323	1-247-816-00	CARBON	240	5%	1/6W
R324	1-247-855-00	CARBON	10K	5%	1/6W
R325	1-247-847-00	CARBON	4.7K	5%	1/6W
R326	1-247-855-00	CARBON	10K	5%	1/6W
R327	1-247-847-00	CARBON	4.7K	5%	1/6W
R328	1-247-842-00	CARBON	3K	5%	1/6W
R329	1-247-829-00	CARBON	820	5%	1/6W
R330	1-247-826-00	CARBON	620	5%	1/6W
R331	1-247-847-00	CARBON	4.7K	5%	1/6W
R332	1-246-500-00	CARBON	13K	5%	1/4W
R333	1-246-482-00	CARBON	2.4K	5%	1/4W
R334	1-246-482-00	CARBON	2.4K	5%	1/4W
R335	1-246-501-00	CARBON	15K	5%	1/4W
R336	1-246-473-00	CARBON	1K	5%	1/4W
R338	1-247-807-00	CARBON	100	5%	1/6W
R350 ⚠	1-217-523-00	FUSIBLE	10	5%	1/4W
R501	1-247-839-00	CARBON	2.2K	5%	1/6W
R502	1-247-903-00	CARBON	1M	5%	1/6W
R503	1-247-839-00	CARBON	2.2K	5%	1/6W
R504	1-247-903-00	CARBON	1M	5%	1/6W
R507	1-247-847-00	CARBON	4.7K	5%	1/6W
R510	1-247-863-00	CARBON	22K	5%	1/6W
R511	1-247-863-00	CARBON	22K	5%	1/6W
R512	1-247-879-00	CARBON	100K	5%	1/6W
R513	1-247-863-00	CARBON	22K	5%	1/6W
R515	1-247-811-00	CARBON	150	5%	1/6W
R516	1-247-819-00	CARBON	330	5%	1/6W
R517	1-247-827-00	CARBON	680	5%	1/6W
R518	1-247-811-00	CARBON	150	5%	1/6W
R522	1-247-872-00	CARBON	51K	5%	1/6W
R523	1-247-855-00	CARBON	10K	5%	1/6W
R524	1-247-879-00	CARBON	100K	5%	1/6W
R525	1-247-855-00	CARBON	10K	5%	1/6W
R526	1-247-855-00	CARBON	10K	5%	1/6W
R527	1-247-819-00	CARBON	330	5%	1/6W

NOTE:
- Items with no part number and no description are not stocked because they are seldom required for routine service.
- Items marked " ♦ " are not stocked since they are seldom required for routine service. Some delay should be anticipated when ordering these items.
- Due to standardization, parts with part numbers (Δ-ΔΔΔ-ΔΔΔ-XX or Δ-ΔΔΔΔ-ΔΔΔ-X) may be different from those used in the set.

CAPACITORS:
MF:μF, PF:μμF.

RESISTORS
- All resistors are in ohms.
- F : nonflammable

COILS
- MMH : mH, UH : μH

SEMICONDUCTORS
In each case, U : μ, for example:
UA···: μA···, UPA···: μPA···, UPC···: μPC,
UPD···: μPD···

NOTE:
- Items with no part number and no description are not stocked because they are seldom required for routine service.
- Items marked " ♦ " are not stocked since they are seldom required for routine service. Some delay should be anticipated when ordering these items.
- Due to standardization, parts with part numbers (Δ-ΔΔΔ-ΔΔΔ-XX or Δ-ΔΔΔΔ-ΔΔΔ-X) may be different from those used in the set.

CAPACITORS:
MF:μF, PF:μμF.

RESISTORS
- All resistors are in ohms.
- F : nonflammable

COILS
- MMH : mH, UH : μH

SEMICONDUCTORS
In each case, U : μ, for example:
UA···: μA···, UPA···: μPA···, UPC···: μPC,
UPD···: μPD···

The components identified by shading and mark ⚠ are critical for safety.
Replace only with part number specified.

Les composants identifiés par une trame et une marque ⚠ sont critiques pour la sécurité.
Ne les remplacer que par une pièce portant le numéro spécifié.

ELECTRICAL PARTS

Ref.No.	Part No.	Description			
R529	1-247-831-00	CARBON	1K	5%	1/6W
R530	1-247-831-00	CARBON	1K	5%	1/6W
R531	1-247-831-00	CARBON	1K	5%	1/6W
R532	1-247-831-00	CARBON	1K	5%	1/6W
R533	1-247-831-00	CARBON	1K	5%	1/6W
R534	1-247-831-00	CARBON	1K	5%	1/6W
R535	1-247-831-00	CARBON	1K	5%	1/6W
R536	1-247-831-00	CARBON	1K	5%	1/6W
R537	1-247-831-00	CARBON	1K	5%	1/6W
R538	1-247-847-00	CARBON	4.7K	5%	1/6W
R539	1-247-855-00	CARBON	10K	5%	1/6W
R540	1-247-839-00	CARBON	2.2K	5%	1/6W
R541	1-247-868-00	CARBON	36K	5%	1/6W
R542	1-247-879-00	CARBON	100K	5%	1/6W
R543	1-247-809-00	CARBON	120	5%	1/6W
R544	1-247-831-00	CARBON	1K	5%	1/6W
R546	1-247-889-00	CARBON	270K	5%	1/6W
R547	1-247-887-00	CARBON	220K	5%	1/6W
R548	1-247-875-00	CARBON	68K	5%	1/6W
R549	1-247-871-00	CARBON	47K	5%	1/6W
R550	1-247-831-00	CARBON	1K	5%	1/6W
R551	1-247-871-00	CARBON	47K	5%	1/6W
R566	1-247-871-00	CARBON	47K	5%	1/6W
R568	1-247-863-00	CARBON	22K	5%	1/6W
R571	1-247-831-00	CARBON	1K	5%	1/6W
R573	1-247-831-00	CARBON	1K	5%	1/6W
RV101	1-226-991-00	RES, VAR, SLIDE 20K/20K (REC LEVEL L)			
RV201	1-226-991-00	RES, VAR, SLIDE 20K/20K (REC LEVEL R)			
RV102	1-226-236-00	RES, ADJ, CARBON 10K			
RV103	1-226-851-41	RES, ADJ, CARBON 10K			
RV104	1-226-236-00	RES, ADJ, CARBON 10K			
RV202	1-226-236-00	RES, ADJ, CARBON 10K			
RV203	1-226-851-41	RES, ADJ, CARBON 10K			
RV204	1-226-236-00	RES, ADJ, CARBON 10K			
RY301	1-515-473-12	RELAY			

ELECTRICAL PARTS

Ref.No.	Part No.	Description
S301	1-554-510-00	SWITCH, PUSH (3 KEY) (DOLBY NR, TAPE SELECT)
S302	1-554-510-00	SWITCH, PUSH (3 KEY) (REPEAT, MUSIC SCAN/BLANK SKIP)
S303	1-554-208-00	SWITCH, SLIDE (TIMER)
S501	1-554-303-00	SWITCH, KEY BOARD (REW)
S502	1-554-303-00	SWITCH, KEY BOARD (STOP)
S503	1-554-303-00	SWITCH, KEY BOARD (PB)
S504	1-554-303-00	SWITCH, KEY BOARD (FF)
S506	1-554-303-00	SWITCH, KEY BOARD (REC)
S507	1-554-303-00	SWITCH, KEY BOARD (PAUSE)
S508	1-554-303-00	SWITCH, KEY BOARD (REC MUTE)
S509	1-554-303-00	SWITCH, KEY BOARD (AMS)
S551	1-554-205-00	SWITCH, PUSH (EJECT)
S552	1-554-205-00	SWITCH, PUSH
S553	1-554-205-00	SWITCH, PUSH
S554	1-554-205-00	SWITCH, PUSH
S901 ⚠	1-553-318-00	SWITCH, PUSH (AC POWER)
SPK101	1-235-186-00	ENCAPSULATED COMPONENT
SPK201	1-235-186-00	ENCAPSULATED COMPONENT
T301	1-433-267-00	TRANSFORMER, OSCILLATOR

NOTE:
- Items with no part number and no description are not stocked because they are seldom required for routine service.
- Items marked " ♦ " are not stocked since they are seldom required for routine service. Some delay should be anticipated when ordering these items.
- Due to standardization, parts with part numbers (Δ-ΔΔΔ-ΔΔΔ-XX or Δ-ΔΔΔΔ-ΔΔΔ-X) may be different from those used in the set.

CAPACITORS:
MF:μF, PF:μμF.

RESISTORS
- All resistors are in ohms.
- F : nonflammable

COILS
- MMH : mH, UH : μH

SEMICONDUCTORS
In each case, U : μ, for example:
UA···: μA···, UPA···: μPA···, UPC···: μPC, UPD···: μPD···

The components identified by shading and mark ⚠ are critical for safety. Replace only with part number specified.

Les composants identifiés par une trame et une marque ⚠ sont critiques pour la sécurité. Ne les remplacer que par une pièce portant le numéro spécifié.